SAMSUNG

DIGITAL LASER MFP
SCX-5X30 Series
SCX-5530FN/XAZ

Basic Model : SCX-5530FN

SERVICE *Manual*

DIGITAL LASER PRINT

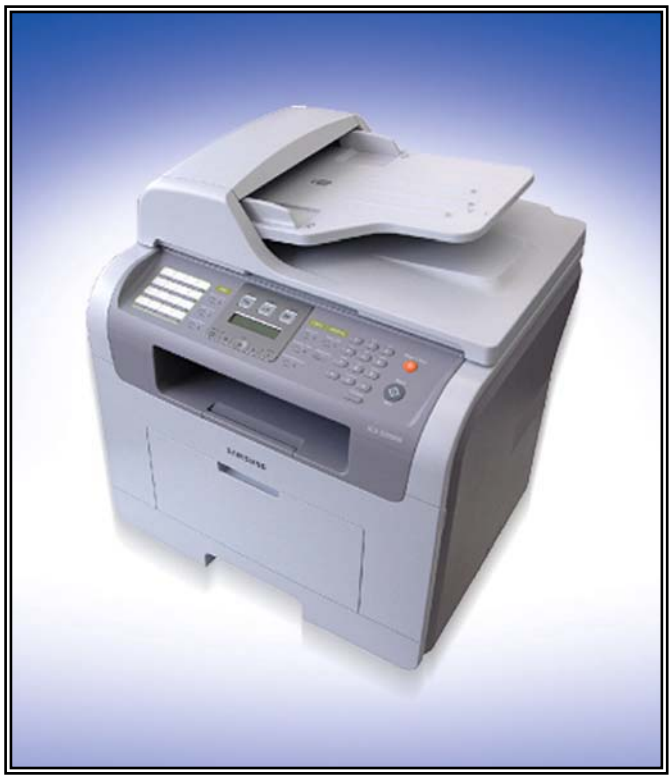

The keynote of Product

[Key Features]

- 28 ppm Print speed/20 cpm Copy Speed (Printing Speed: A4/28ppm,Letter/30ppm)
- 1200 dpi Print Resolution (Addressable)
- PCL6, PS3(SCX-5530FN)
- CPU: Chorusm
- Network Solution: Scan-to-Email, Scan-to-SMB, Scan-to-FTP
- 64MB System Memory/32MB DIMM(5530FN)
- 50 ADF / MP 50 Sheet
- 250 sh Paper Input / 150 sh Paper Output
- 33.6 Kbps Fax Modem (5530FN only)
- Duplex Print (5530FN only)
- Direct USB Connectivity 2nd Version (PDF Direct Printing) (5530FN only)
- Small Foot Print
- Toner: 4K(Initial)/ 8K(sales)

Contents

1. Precautions

1.1 Safety Warning 1-1
1.2 Caution for safety 1-2
1.3 ESD Precautions 1-5
1.4 Super Capacitor or Lithium Battery Precautions 1-5

2. Product Specification

2.1 Product Overview 2-1
2.2 Product General Specifications 2-2
2.3 Model Comparison Table 2-7
2.4 ACCESSROY 2-7
2.5 Options 2-8

3. System Overview

3.1 System Construction 3-1
3.2 Mechanical Parts Specifications 3-8
3.3 Engine F/W 3-31
3.4 S/W Descriptions 3-34

4. Alignment and Adjustments

4.1 Paper path 4-1
4.2 Clearing Paper Jams 4-2
4.3 User Mode 4-8
4.4 Tech Mode 4-14
4.5 Identify Sale Date 4-23
4.6 Consumables and Replacement Parts 4-24
4.7 Abnormal Image Printing and Defective Roller 4-25
4.8 Display LED and Error Messages 4-26

Continued

5. Disassembly and Reassembly

5.1 General Precautions on Disassembly 5-1
5.2 Disassembly and Reassembly 5-2

6. Troubleshooting

6.1 Procedure of Checking the Symptoms 6-1
6.2 Paper Feeding Problems 6-2
6.3 Printing Problems (malfunction) 6-6
6.4 Printing Quality Problems 6-12
6.5 Fax & Phone Problems 6-19
6.6 Copy Problems 6-23
6.7 Scanning Problems 6-25
6.8 Toner Cartridge Service 6-26
6.9 Network Problems Troubleshooting 6-30

7. Exploded Views & Parts List

7.1 Main Exploded Views 7-2
7.2 Cover Ass'y 7-4
7.3 Middle Cover Ass'y 7-6
7.4 Front Cover Ass'y 7-8
7.5 Rear Cover Ass'y 7-10
7.6 Frame Assembly 7-12
7.7 Fuser Drive Ass'y 7-16
7.8 Main Drive Ass'y 7-18
7.9 MP Ass'y 7-20
7.10 Scan Ass'y 7-22
7.11 Platen Ass'y 7-24
7.12 Cover Platen Ass'y 7-26

Continued

7.14 OPE Unit · 7-31
7.15 Cassette Ass'y · 7-33
7.16 Fuser Ass'y · 7-35
7.17 Duplex Unit(Optional) · · · · · · · · · · · · · · · · 7-37

8. Block diagram

9. Connection Diagram

10. Schematic Diagram

10.1 Schematic Main · · · · · · · · · · · · · · · · · · · 10-1
10.2 DIMM board · 10-16
10.3 CRUM board · 10-18
10.4 OPE_3in1 · 10-19
OPE_4in1 · 10-20
10.5 HVPS · 10-21
10.6 SMPS_V1 · 10-24
SMPS_V2 · 10-25
10.7 SCF · 10-26
10.8 ADF PBA · 10-28
10.9 Modem · 10-29
10.10 Connection · 10-33
10.11 Terminal · 10-34

11. Power Signal

11.1 Main Board Power signal · · · · · · · · · · · · · · · 11-1
11.2 OPE / ADF Power signal · · · · · · · · · · · · · · · 11-2
11.3 HVPS / Voltage map · · · · · · · · · · · · · · · · · 11-3

Continued

12. Reference Information

12.1 Tool for Troubleshooting 12-1
12.2 Acronyms and Abbreviations 12-2
12.3 The Sample Pattern for the Test 12-3
12.4 Wireless LAN 12-4

1. Precautions

In order to prevent accidents and to prevent damage to the equipment please read the precautions listed below carefully before servicing the printer and follow them closely.

1.1 Safety Warning

(1) Only to be serviced by appropriately qualified service engineers.
High voltages and lasers inside this product are dangerous. This printer should only be serviced by a suitably trained and qualified service engineer.

(2) Use only Samsung replacement parts
There are no user serviceable parts inside the printer. Do not make any unauthorized changes or additions to the printer, these could cause the printer to malfunction and create electric shock or fire haz-ards.

(3) Laser Safety Statement
The Printer is certified in the U.S. to conform to the requirements of DHHS 21 CFR, chapter 1 Subchapter J for Class 1(1) laser products, and elsewhere, it is certified as a Class I laser product con-forming to the requirements of IEC 825. Class I laser products are not considered to be hazardous. The laser system and printer are designed so there is never any human access to laser radiation above a Class I level during normal operation, user maintenance, or prescribed service condition.

Warning >> Never operate or service the printer with the protective cover removed from Laser/Scanner assembly. The reflected beam, although invisible, can damage your eyes. When using this product, these basic safety pre-cautions should always be followed to reduce risk of fire, electric shock, and injury to persons.

CAUTION - INVISIBLE LASER RADIATION WHEN THIS COVER OPEN. DO NOT OPEN THIS COVER.

VORSICHT - UNSICHTBARE LASERSTRAHLUNG, WENN ABDECKUNG GE FFNET. NICHT DEM STRAHL AUSSETZEN.

ATTENTION - RAYONNEMENT LASER INVISIBLE EN CAS D OUVERTURE. EXPOSITION DANGEREUSE AU FAISCEAU.

ATTENZIONE - RADIAZIONE LASER INVISIBILE IN CASO DI APERTURA. EVITARE L ESPOSIZIONE AL FASCIO.

PRECAUCION - RADIACION LASER IVISIBLE CUANDO SE ABRE. EVITAR EXPONERSE AL RAYO.

ADVARSEL. - USYNLIG LASERSTR LNING VED BNING, N R SIKKERHEDSBRYDERE ER UDE AF FUNKTION. UNDG UDSAETTELSE FOR STR LNING.

ADVARSEL. - USYNLIG LASERSTR LNING N R DEKSEL PNES. STIRR IKKE INN I STR LEN. UNNG EKSPONERING FOR STR LEN.

VARNING - OSYNLIG LASERSTR LNING N R DENNA DEL R PPNAD OCH SP RREN R URKOPPLAD. BETRAKTA EJ STR LEN. STR LEN R FARLIG.

VARO! - AVATTAESSA JA SUOJALUKITUS OHITETTAESSA OLET ALTTIINA N KYM TT M LLE LASER-S TEILYLLE L KATSO S TEESEEN.

注 意 - 严禁渴开此盖, 以免激光泄露灼伤

주 의 - 이 덮개를 열면 레이저광에 노출될 수 있으므로 주의하십시오.

1.2 Caution for safety

1.2.1 Toxic material

This product contains toxic materials that could cause illness if ingested.

(1) If the LCD control panel is damaged it is possible for the liquid inside to leak. This liquid is toxic. Contact with the skin should be avoided, wash any splashes from eyes or skin immediately and contact your doctor. If the liquid gets into the mouth or is swallowed see a doctor immediately.

(2) Please keep toner cartridges away from children. The toner powder contained in the toner cartridge may be harmful and if swallowed you should contact a doctor.

1.2.2 Electric Shock and Fire Safety Precautions

Failure to follow the following instructions could cause electric shock or potentially cause a fire.

(1) Use only the correct voltage, failure to do so could damage the printer and potentially cause a fire or electric shock.

(2) Use only the power cable supplied with the printer. Use of an incorrectly specified cable could cause the cable to overheat and potentially cause a fire.

(3) Do not overload the power socket, this could lead to overheating of the cables inside the wall and could lead to a fire.

(4) Do not allow water or other liquids to spill into the printer, this can cause electric shock. Do not allow paper clips, pins or other foreign objects to fall into the printer these could cause a short circuit leading to an electric shock or fire hazard..

(5) Never touch the plugs on either end of the power cable with wet hands, this can cause electric shock. When servicing the printer remove the power plug from the wall socket.

(6) Use caution when inserting or removing the power connector. The power connector must be inserted completely otherwise a poor contact could cause overheating possibly leading to a fire. When removing the power connector grip it firmly and pull.

(7) Take care of the power cable. Do not allow it to become twisted, bent sharply round corners or other wise damaged. Do not place objects on top of the power cable. If the power cable is damaged it could overheat and cause a fire or exposed cables could cause an electric shock. Replace a damaged power cable immediately, do not reuse or repair the damaged cable. Some chemicals can attack the coating on the power cable, weakening the cover or exposing cables causing fire and shock risks.

(8) Ensure that the power sockets and plugs are not cracked or broken in any way. Any such defects should be repaired immediately. Take care not to cut or damage the power cable or plugs when moving the machine.

(9) Use caution during thunder or lightening storms. Samsung recommend that this machine be disconnected from the power source when such weather conditions are expected. Do not touch the machine or the power cord if it is still connected to the wall socket in these weather conditions.

(10) Avoid damp or dusty areas, install the printer in a clean well ventilated location. Do not position the machine near a humidifier. Damp and dust build up inside the machine can lead to overheating and cause a fire.

(11) Do not position the printer in direct sunlight. This will cause the temperature inside the printer to rise possibly leading to the printer failing to work properly and in extreme conditions could lead to a fire.

(12) Do not insert any metal objects into the machine through the ventilator fan or other part of the casing, it could make contact with a high voltage conductor inside the machine and cause an electric shock.

1.2.3 Handling Precautions

The following instructions are for your own personal safety, to avoid injury and so as not to damage the printer

(1) Ensure the printer is installed on a level surface, capable of supporting its weight. Failure to do so could cause the printer to tip or fall.
(2) The printer contains many rollers, gears and fans. Take great care to ensure that you do not catch your fingers, hair or clothing in any of these rotating devices.
(3) Do not place any small metal objects, containers of water, chemicals or other liquids close to the printer which if spilled could get into the machine and cause damage or a shock or fire hazard.
(4) Do not install the machine in areas with high dust or moisture levels, beside on open window or close to a humidifier or heater. Damage could be caused to the printer in such areas.
(5) Do not place candles, burning cigarettes, etc on the printer, These could cause a fire.

1.2.4 Assembly / Disassembly Precautions

Replace parts carefully, always use Samsung parts. Take care to note the exact location of parts and also cable routing before dismantling any part of the machine. Ensure all parts and cables are replaced correctly. Please carry out the following procedures before dismantling the printer or replacing any parts.

(1) Check the contents of the machine memory and make a note of any user settings. These will be erased if the mainboard or network card is replaced.
(2) Ensure that power is disconnected before servicing or replacing any electrical parts.
(3) Disconnect printer interface cables and power cables.
(4) Only use approved spare parts. Ensure that part number, product name, any voltage, current or temperature rating are correct.
(5) When removing or re-fitting any parts do not use excessive force, especially when fitting screws into plastic.
(6) Take care not to drop any small parts into the machine.
(7) Handling of the OPC Drum
- The OPC Drum can be irreparably damaged if it exposed to light.
  Take care not to expose the OPC Drum either to direct sunlight or to fluorescent or incandescent room lighting. Exposure for as little as 5 mins can damage the surface's photoconductive properties and will result in print quality degradation. Take extra care when servicing the printer. Remove the OPC Drum and store it in a black bag or other lightproof container. Take care when working with the covers(especially the top cover) open as light is admitted to the OPC area and can damage the OPC Drum.
- Take care not to scratch the green surface of OPC Drum Unit.
  If the green surface of the Drum Cartridge is scratched or touched the print quality will be compromised.

1.2.5 Disregarding this warning may cause bodily injury

(1) Be careful with the high temperature part.
The fuser unit works at a high temperature. Use caution when working on the printer. Wait for the fuser to cool down before disassembly.

(2) Do not put finger or hair into the rotating parts.
When operating a printer, do not put hand or hair into the rotating parts (Paper feeding entrance, motor, fan, etc.). If do, you can get harm.

(3) When you move the printer.
This printer weighs 17.5kg including toner cartridge and cassette. Use safe lifting and handling techniques. Use the lifting handles located on each side of the machine. Back injury could be caused if you do not lift carefully.

(4) Ensure the printer is installed safely.
The printer weighs 17.5Kg, ensure the printer is installed on a level surface, capable of supporting its weight. Failure to do so could cause the printer to tip or fall possibly causing personal injury or damaging the printer.

(5) Do not install the printer on a sloping or unstable surface. After installation, double check that the printer is stable.

1.3 ESD Precautions

Certain semiconductor devices can be easily damaged by static electricity. Such components are commonly called “Electrostatically Sensitive (ES) Devices”, or ESDs. Examples of typical ESDs are: integrated circuits, some field effect transistors, and semiconductor “chip” components.

The techniques outlined below should be followed to help reduce the incidence of component damage caused by static electricity.

Caution >>Be sure no power is applied to the chassis or circuit, and observe all other safety precautions.

1. Immediately before handling a semiconductor component or semiconductor-equipped assembly, drain off any electrostatic charge on your body by touching a known earth ground. Alternatively, employ a commercially available wrist strap device, which should be removed for your personal safety reasons prior to applying power to the unit under test.
2. After removing an electrical assembly equipped with ESDs, place the assembly on a conductive surface, such as aluminum or copper foil, or conductive foam, to prevent electrostatic charge buildup in the vicinity of the assembly.
3. Use only a grounded tip soldering iron to solder or desolder ESDs.
4. Use only an “anti-static” solder removal device. Some solder removal devices not classified as “anti-static” can generate electrical charges sufficient to damage ESDs.
5. Do not use Freon-propelled chemicals. When sprayed, these can generate electrical charges sufficient to damage ESDs.
6. Do not remove a replacement ESD from its protective packaging until immediately before installing it. Most replacement ESDs are packaged with all leads shorted together by conductive foam, aluminum foil, or a comparable conductive material.
7. Immediately before removing the protective shorting material from the leads of a replacement ESD, touch the protective material to the chassis or circuit assembly into which the device will be installed.
8. Maintain continuous electrical contact between the ESD and the assembly into which it will be installed, until completely plugged or soldered into the circuit.
9. Minimize bodily motions when handling unpackaged replacement ESDs. Normal motions, such as the brushing together of clothing fabric and lifting one’s foot from a carpeted floor, can generate static electricity sufficient to damage an ESD.

1.4 Super Capacitor or Lithium Battery Precautions

1. Exercise caution when replacing a super capacitor or Lithium battery. There could be a danger of explosion and subsequent operator injury and/or equipment damage if incorrectly installed.

2. Be sure to replace the battery with the same or equivalent type recommended by the manufacturer.

3. Super capacitor or Lithium batteries contain toxic substances and should not be opened, crushed, or burned for disposal.

4. Dispose of used batteries according to the manufacture’s instructions.

2. Product Specifications

Specfications are correct at the time of printing. Product specifications are subject to change without notice. See below for product specifications.

2.1 Product Overview

○ Model - SCX-5330N(3 in 1) : Copier, Printer, Scan
- SCX-5530FN(4 in 1) : Copier, Printer, Scan, Fax

○ Concept: MFP of high speed

○ Target User : Small & Medium Business

○ Customer Benefits (Sales Points)

- Fast Printing Speed
  (28ppm in A4 / 30ppm in Letter)
- Multifunction Network Solution
  (Scan-to-Email, Scan-to-SMB, Scan-to-FTP)
- Duplex Capability(SCX-5530FN only)
- Direct USB Connectivity 2nd Version
  (PDF Direct Printing)
- Small Foot Print

○ Key Features

- 28 ppm Print speed/20 cpm Copy Speed
- 1200 dpi Print Resolution (Addressable)
- PCL6, PS3
- 64MB System Memory
- 50 ADF
- 250 sh Paper Input / 150 sh Paper Output
- 33.6 Kbps Fax Modem
- Duplex Print

2.2 Product General Specifications

Items			Series Model		Remarks
			SCX-5330N	SCX-5530FN	
General	Major Features		As Standalone: Copier, Printer, Scan	As Standalone: Copier, Printer, Scan, Scan to USB, Fax	
			As Network connected: Network Print, Network Scan, Scan to E-mail, Scan to SMB, Scan to FTP		
	Size (W*D*H) w/o Hand Set		460 ×435 ×450 mm (17.7 ×17.1 ×18inch)		
	Net Weight(Inc. Toner Cartridge)		17.5 Kg (38.6 lbs)		
	Net Weight(exc. Toner Cartridge)		15.7kg		
	Gross Weight(with package)		21.7kg		
	LCD		16*2 Char(Export common)		(w/o backlight)
	I/O Interface		IEEE 1284/ USB 2.0/ Ehternet 10/100 base Tx (Embedded type)		
	MPU		CHORUSm / 300MHz		System Bus 100MHz
Power Consumption	Printing Operation		Less than 520W		
	Sleep Mode		Less than 30W		
	Power Switch		Yes		
Power Supply	Input Voltage		Low Voltage : 110 ~ 127VAC		
			High Voltage : 220 ~ 240VAC		
	Input Frequency		50 / 60Hz(+/- 3Hz)		
Noise	Printing		54dBA		
	Copy		55dBA		
	Standby		39dBA		
Warm Up Time	from Cold Status		Less than 20 seconds , Cold warm-Up time : 25sec		
Machine Life	Max. Monthly Volume(Duty Cycle)	Print	25,000 pages		
		Scan	2,000 pages		
		ADF	3,000 pages		
	Machine Life		250,000 pages		
Periodic Replacing	Pickup Roller		150,000 Pages		
	Pad Unit (Tray)		250,000 pages		
	Pad Unit (ADF)		20,000 Pages		
	Transfer Roller		70,000 Pages		
	Fuser Unit		80,000 Pages		
Device Memory	Standard / Max.		64MB / 192MB(Std./Max)	92MB / 192MB(Std./Max)	
	Type		SDRAM	SDRAM	
	Expand Memory Slot , Type		SDRAM DIMM		Expand Memory specification would be defined separate note.
	Compression Technology		YES		

Items			Series Model		Remarks
			SCX-5330N	SCX-5530FN	
PRINT	Print Speed		Simplex30ppm/Ltr, 28ppm/A4 (600 dpi)		
	Print Speed(Duplex)		N/A	21ipm/Ltr, 19ipm/A4 (600dpi)	Usable paper sizes(Let. A4. Folio.Legal),Oficio
	Print Emulation		PCL6	PCL6, PS3	
	Auto Emulation Sensing		YES		
	Font Type		45 Scalable, 1 Bitmap		
	Power Save		Yes (5/10/15/30/45min.)		
	Resolution		Normal(Up to 1200dpi Effective Output(Addressable 1200x1200dpi))		
	Toner Save		Yes		
	Memory		16MB		
	FPOT(From Stand by)		Less than 8.5 sec (From Ready)		
	Duplex Print		N/A	Yes	
	Printable Area		208 x 273 mm (Letter)		
	Halftone(Gray Scale)		256levels		
SCAN	Scan Method		Color CCD		
	Scan Speed through ADF	Linearity	Approx. 15sec (USB 2.0)		
		Gray	Approx. 20sec (USB 2.0)		
		Color	Approx. 30sec (USB 2.0)		
	Scan Speed through Platen	Linearity	Approx. 15sec (USB 2.0)		
		Gray	Approx. 20sec (USB 2.0)		
		Color 75dpi /300dpi	Approx. 30sec (USB 2.0)		
	Resolution	Optical	600*1200dpi		75, 300, 600dpi horizontal
		Enhanced	4800dpi*4800dpi		
	Halftone		256level		for only optical resolution
	Scan Size(Max. Document Width)		Max.216mm(8.5")		
	Scan Size(Effective Scan Width)		Max 208mm(8.2inch)		
	Scan-to		Scan-to-Application	Scan-to-Application, Scan-to-USB	
	Scan Depth		Color(24 bit)		
	Scan Depth		Mono(1bit for Lineart, 8 Bit for Gray scale)		
	Copy Quality Selection or Original Image type selection Mode	Text	600x300dpi		
		Text/Photo	600x300dpi		
		Photo	600x300dpi		
		Other	N/A		
	FOOT	Stand by	Less than 8.5 sec (From Ready)		
		From Cold Status	Less than 31.5 seconds		
	Copy Speed/ Letter	SDMC at all mode	30cpm/Ltr, 28cpm/A4		SDMC: Single Document Multiple Copy

Items			Series Model		Remarks
			SCX-5330N	SCX-5530FN	
		MDMC at mode	20cpm/A4		MDMC: Multi-all document Multiple Copy
	Resolution		Scan:600x300dpi, 600*600dpi, Print:600*600dpi		
	Zoom Range		25% to 400% for Platen 25% to 100% for ADF		
	Number of Copies		1~99		
	Preset		Yes		
	Contrast Levels		3 level		
	Copy Mode(=Quality)		Text, Text/Photo, Photo		
	Collation Copy		Yes(ADF only)		
	Auto return to default mode		Yes		Time can be changeable ; 15,30,60,180sec, Off
	Changeable Default mode		Contrast, Image, Reduce/Enlarge,No. of Copies		
	Special Copy(N-up copy)		2-up, 4-up (ADF only)		
	Special Copy(Auto Fit Copy)		Yes(Platen only)		
	Special Copy(AID Copy)		Yes(Platen only)		* Copy 2-side printed original document into one page (ex. ID Card Copy)
	Special Copy(Clone)		Yes(Platen only)		
	Poster		Yes(Platen only)		
TELEPHONE	Handset		N/A	No	
	On hook Dial		N/A	Yes	
	Search		N/A	Yes(Phone Book)	by using Phone Book Button (Same as Rocky)
	1-Touch Dial		N/A	30EA	
	Speed Dial		N/A	200 locations	Total locations can be stored
	TAD I/F		N/A	Yes	
	Tone/Pulse		N/A	Selectable in Tech mode	
	Pause		N/A	Yes	
	Auto Redial		N/A	Yes	
	Last Number Redial		N/A	Yes	
	Distinctive Ring		N/A	Yes	
	Caller ID		N/A	No	
	External Phone Interface		N/A	Yes	

Items			Series Model		Remarks
			SCX-5330N	SCX-5530FN	
	Report & List Print out	Tx/Rx Journal	N/A	Yes	
		Confirmation	N/A	Yes	
		Help List	N/A	No	
		Auto Dial List	N/A	Yes	
		System Data List	N/A	List all user setting	
	Sound Control	Ring Volume	N/A	Yes(Off, Low, MED, HIGH)	
		Key Volume	N/A	Yes(On, Off)	
		Alarm Volume	N/A	Yes(On, Off)	
		Speaker	N/A	Yes(On, Off)	
FAX	Compatibility		N/A	ITU-T G3	
	Communication System		N/A	PSTN/PABX	
	Modem Speed		N/A	33.6Kbps	
	TX Speed		N/A	3sec	LRT/MMR/ CCITT No.1 Chart/33.6Kbps
	Compression		N/A	MH/MR/MMR/JPEG/JBIG	
	Color Fax		N/A	Yes(Sending Only)	
	ECM		N/A	Yes	
	Resolution Fine		N/A	203*196dpi	
	S.Fine		N/A	203*196dpi	
	Std		N/A	300*300dpi	
	Scan Speed(ADF) Std		N/A	2.5 sec/ LTR	
	Fine/S.Fine		N/A	5 sec/ LTR	
	Rx fax duplex print out		N/A	No	
	Multiple page scan speed		N/A	21ppm/LTR, Std mode	
	Receive Mode		N/A	Fax, TEL, Ans/Fax, DRPD	
	Memory	Capacity	N/A	8MB	
		Optional	N/A	No	
		Max locations to store to 1 Group Dial	N/A	229 locations	
		Fax Forward	N/A	Yes(On/Off), both Sent and Received	
		Broadcasting	N/A	up to 239 locations	
		Cover page	N/A	No	
		Delayed fax	N/A	Yes (Tx only)	
		Memory RX	N/A	Yes	
		Voice Request	N/A	No	
	Functions	TTI	N/A	Yes	
		RTI	N/A	Yes	
		Polling	N/A	No	
		Earth/Recall	N/A	No	
		Auto Reduction	N/A	Yes (On,Off)	
		F/W Remote	N/A	Yes	

Items			Series Model		Remarks
			SCX-5330N	SCX-5530FN	
	Junk Fax barrier		N/A	Yes	
	Secure Receive		N/A	Yes	
	Memory Back-up		N/A	Yes, Max. 72hours	
NETWORK	Option		No (Default)		
	Protocol		TCP/IP(LPR, Standard TCP/IP Printing, Samsung Port, IPP), NetWare	TCP/IP(LPR, Standard TCP/IP Printing,Samsung Port, IPP), NetWare, Ethertalk	
	Operating System		Microsoft Windows 98/ME/2000/XP/2003,Microsoft Windows NT 4.x, 5.x, 6.x,Mac OS 10.3 and abover (TCP/IP ONLY),Various Linux OS including Red Hat, Caldera, Debian, Mandrake, Slackware, SuSE and Turbo Linux,Novell 4.x,5.x,6.x		
Paper Handling	Capacity(20lbs)	Main Tray	250sheets		
		MP Tray	50 Sheets		
	Optional Cassette		250sheets		
	Output Capacity		Face Down: 150Sheets/20lb,Face Up: 1Sheet		
	Output Control		Face Up/Down controlled manually by opening rear cover		
	Paper Size(Main Tray)		A4, A5, Letter, Legal, Executive, Folio, Oficio, ISO B5, JIS B5		
	Paper Size	MP Tray	A4, A5, A6, Letter, Legal, Folio, Oficio, Executive, ISO B5, JIS B5, 3"x5",Monarch, No.10, DL, C5, C6		
	Paper Weight	Main Tray	16~24lb (60 to 90g/㎡)		
		MP Tray	16~43 lb.		
	Paper Path	Standard output	Bottom to Middle Front (FIFO)		
		Straight Through	Face up, Single Sheet		
	Paper Size	Max	216 x 356mm(8.5"x14")		
		Min	76 x 127mm(3"x5")		
	ADF	Paper Weight	12.5~28lb		
		Capacity	50 sheets		
		Document Size Width	142mm - 216mm(5.6" - 8.5")		
		Document Size Length	148 mm - 356mm(5.8" - 14.0")		
		Document Thickness	0.075mm - 0.13mm(0.003” - 0.005”)		
Toner Cartridge	Toner Type		One Piece Type Toner Cartridge		
	Toner Life		Initial 4Kpages (ISO 19752 Standard Test Pattern), running Standard: 4Kpages,High yield: 8K pages		
	Toner Level Sensor		No		
	Toner Count		Yes (CRUM)		
Accessory	CBF-Power Cord		1EA		
	Network CD		1EA (Network only)		
	Driver CD		1EA		
	Option CD		1EA		
	Warranty Card		1EA		
	Manual (User)		1EA		

2.3 Model Comparison Table

Item		Samsung SCX-4720FN (Rocky2 PLUS)	Samsung SCX-5530FN (Elbert)	Remarks
Base Engine		ML-2250	ML-3050	
NW Function	Print	Yes	Yes	
	NW Scan	Single Folder	**Multiple Folder**	
	Scan-to	Application, USB	Application, USB, **FTP, SMB, E-mail**	
PDF Direct Printing		No	**Yes**	
Warm up		30 **(Sec)**	**20 (Sec)**	**E-coil Technology**
Print	Speed/Ltr	22ppm	**30ppm**	
	FPOT	10 sec	**8.5 sec**	
	Emulation	PCL6	PCL6, **PS3**	
	Duplex Print	No	**Yes**	
	Memory	64MB(Up to 192MB)	64MB+32MB(Up to 192MB)	**-Direct print (RAMDIMM)**
Copy	Zoom	25 - 400 %	25-400%	
Scan	Resolution	600x1200 dpi	600x1200 dpi	
Paper Handling	ADF	50 sheets	50 sheets	
	Input Tray	250sh Tray + 50sh MP (optional 250sh Tray)	250sh Tray + **50**sh Manual (optional 250sh Tray)	
Others	Toner	Standard : 3K High Yield: 5K	**Standard: 4K** **High Yield: 8K**	
	Interface	USB 2.0, Parallel	USB 2.0, Parallel	

2.4 ACCESSORY

Item	Code	Quantity
INA-ACCESSORY	JC99-01934B	1
PE-bag	6902-000288	1
LABEL(P)-BAR CODE	JC68-01584A	1
POWER CORD	3903-000067	1
USB CABLE	JC39-00001A	1
LINE-CORD(SCX-5530FN Only)	JC39-00007A	1
Driver-CD	JC46-00271A	1
Network-CD	JC46-00255A	1
Network-QIG	JC68-01579A	1
MANUAL-(CARD)WARRANTY CARD	JC68-00690A	1
MANUAL-(CARD)BITS	JC68-00421A	1
LABEL(P)-BLANK	JC68-01584A	1

2.5 Options

Item	Option Spec.	
	SCX-5330N(3-in-1)	SCX-5530FN (4-in-1)
Options	Wireless Internal Network Card (SCX-00LA)	Wireless Internal Network Card (SCX-00LA)
Memory	Up to 192MB	Up to 192MB
Paper Cassette	1EA x 250-sheet Cassette Tray (Model Code: SCX-S5530A)	1EA x 250-sheet Cassette Tray (Model Code: SCX-S5530A)
PS	No	No
Mechanical Counter	No	No
F D I	No	No
Downloadable Font ROM	No	No
2nd Fax Modem	No	No
Desk	No	No

3. System Overview

3.1 System Construction

3.1.1 SUMMARY

SCX-5530FN is roughly made up Main Control part, Operation Panel part, Scanner part, Line Interface part and Power part. Each Part is separated Module which focus on common and standard design of different kind products. Main control part adopting Fax & LBP Printer exclusive Controller is composed of 1 CPU and 1 Board. Scanner part is composed of ADF and Platen and is connected with Main by Harness. Line Interface Unit part is designed to apply TBR21 standard (Domestic, Europe, etc.)

1) CPU : ARM920T , which is exclusive controller to execute Printer & FAX Function and to execute operation block by flash memory within system program, and to control whole system.

- Main function block
- Completely Integrated System for Embedded Applications
- PVC
  - Dual / Single Beam, - LVDS Pad (VDO, HSYNC), - Support A3 1200dpi, multi-pass color.
- HPVC
  - Dual / Single Beam, - LVDS Pad (VDO, HSYNC), - Support A4 600dpi, multi-pass color.
- DMA
  - 6 Channels (if not use CIP4e, 4ch is available for external DMA.
    if CIP4E used (a4 DMA channel use), 2ch available for external DMA)
- Operation Frequency : CPU Core -> over 300MHz, System Bus -> 100MHz
- Operation Voltage : Core Voltage -> 1.2V, I/O Pad Voltage -> 3.3V, RTC Voltage -> 3V

2) Flash Memory : Record System Program, and download System Program by PC INTERFACE.
FAX for Journal List, and Memory for One Touch Dial, Speed Dial List.
- Size : 32M Byte (NAND Flash)
- Random Access Time: 10us (Max)
- Serial Page Access Time: 50ns (Min)

3) SDRAM : is used as Swath Buffer in Printing, Scan Buffer in Scanning, ECM Buffer in FAX receiving, and System Working Memory Area
- Size : 64Mbyte(Basic) , 96Mbyte(Duplex)
  MB : System Working Memory Area and Scan Buffer
  MB : FAX Memory Receive Area
  MB : Printing System Working Memory Area
- Max Frequency : 166MHz
- Store Fax Receive Memory Data by using Battery

3.1.2 Engine H/W

1) Sensor Input Circuit
- Paper Empty Sensing:
  The Paper empty sensor (Photo Interruptor) on the HVPS informs the state of paper to CPU whether it is empty or not with operation of the actuator. When cassette is empty, it detects the fact by reading the E20 of CPU, and then informs the fact by displaying the RED.

2) MP Sensing:
By operation of Actuator on the frame, MP Sensor (Photo interruptor) on the HVPS informs the state of paper to CPU whether it is empty or not. It reads the D17 of CPU for recognizing paper in MP, and paper is fed from MP if there is.

3) Paper Feeding Sensing:
When paper passes the actuator (feed sensor part), it detects the signal of Photo interrupter, informs the paper feeding state to CPU, and then sprays the image data after certain time.
If it doesn't detect the feed sensor within 1sec. after paper is fed, paper Jam0 is occurred (LCD will be displayed RED color). The fact whether the developer is inserted or not is detected by CRUM. After the developer is mounted, the sub-CRUM can read the information of toner cartridge from contact with CRUM involved in toner cartridge. If the information of toner cartridge is invalid, it will show invalid sign on a LCD and LED(LED will be displayed RED color).

4) Paper Exit Sensing:
It detects paper state whether paper gets out from the set with operation of exit sensor on the HVPS and actuator on the frame. Paper detects the on/off time of exit sensor by reading D22 of CPU, and the normal operation or jam information is informed to the CPU. The paper JAM2 is informed. (LED will be displayed RED color)

5) Cover Open Sensing:
The Cover open sensor is located on the HVPS. After the front cover is opened, +24VS (DC fan, Solenoid, Main Motor, Polygon motor part of LSU and HVPS), which is supplied to the each unit, is cut off. The cover-open sensing is operated by the D23 of CPU. In case, the red will be ON for informing the facts to user.

6) DC FAN / SOLENOID Driving:
It is driven by transistor and controlled by D14(FAN MAIN), E16(FAN DUPLEX), C23(PICK-UP CLUTCH), C18(REGI CLUTCH), D15(MPF CLUTCH) of CPU. When it is high, the fan is driving by turning on the TR, and it is off when the sleep mode is selected. There are three solenoids, and they are driven by paper pick-up, regi and MPF signal. It is turned on or off by C23, C18, D15 of CPU. The diode protects the driving TR from the noise pulse, which is flown when the solenoid id de-energizing. FAN Driving Circuit is driven by Transistor, and controlled by D14, E16 of CPU.

7) Motor Driving:
The main motor driving circuits is on the BLDC Motor Ass'y Unit. Main Controller has the interfacing circuits.
There is motor driver IC on the motor control board of Motor Ass'y Unit.
The exit motor driving circuits is formed when the driver IC is selected.
The AN44060A Motor Driver IC is used in this case. The resistance Rs value for sensing and voltage value for the V reference can be changed by motor driving voltage value.

3.1.3 Assembly Description

3.1.3.1 Feeding Section

- Feeding Method : Universal Cassette Type
- Feeding Standard : Center Loading
- Feeding Capacity : Cassette 250 Sheets (75g/㎡, 20lb StandardPaper)

Cassette

MPF

3.1.3.2 Transfer Ass'y

- In Warranty(Life time) : Within 70,000 sheets printing

3.1.3.3 Driver Ass'y

- MAIN Motor ass'y is for Cassette,MPF and Toner Cartridge
- EXIT Motor ass'y is for fuser,exit roller and the initial duplexing feeding
- DUPLEX Motor ass'y is for duplexing feeder on SCX-5530FN only

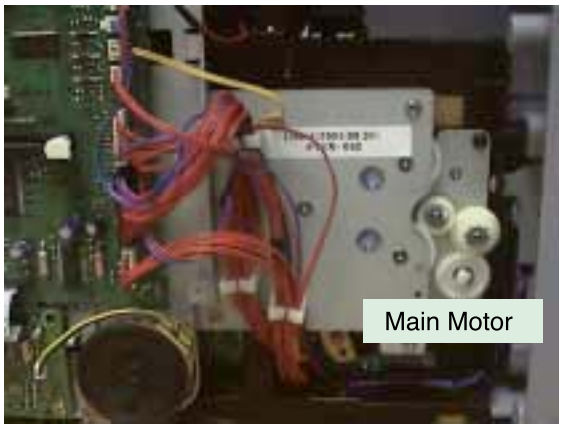

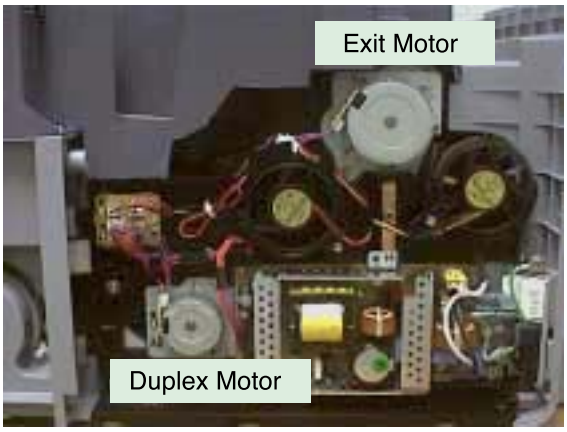

3.1.3.4 Fuser Ass'y

- Fusing Type : [Halogen Lamp(R2) → E-Coil type (Elbert) / Halogen Lamp(Dove)]
- Heat Roller : [ϕ28.3 with 0.1 Clown]
- Pressure Roller : [electrically conductive]
- Thermistor - Temperature Detecting Sensor
- Thermostat - Overheat Protection Device

Trouble	Temperature Control concept
Open Heat Error	90℃ below for 45 sec at Warm up
Over Heat Error	230℃ over for 10 sec or 240℃ over for 5 sec
Low Heat Error	Standby :130℃ below for 10 sec Printing : 35℃ below for 7 sec at consecutibve 2 page printing.

3.1.3.5 LSU

- LSU is consist of LD(Laser Diode) and polygon motor control. When the controller generate the printing signal LD will turn on and Polygon motor starts.If the receiving part in LSU detect the beam and then Hsync is generated. When the rotation of poygon motor is steady, it is time of LSU ready status for printing. If either of two condition is not satisfied, LSU error is expected.

Trouble	Failure Analysis
Polygon Motor Error	No steady rotation of Polygon Motor
Hsync Error	In spite of steady rotation of Polygon Motor, No the generation of the Hsync signal

3.1.3.6 Scanner(ADF)

- 3 in 1 : SCX-5330N
- 4 in 1 : SCX-5530FN
- Scanning Method: Color CCD(600 x 1200 dpi)
- Scan speed : SDMP 28cpm/MDSP 20cpm

3.1.3.7 Toner Cartridge

- OPC Cleaning :Mechanical Cleaning by the cleaning blade.
- The recycled toner : Trash room for the recycled toner
- No shutter for protecting the OPC Drum

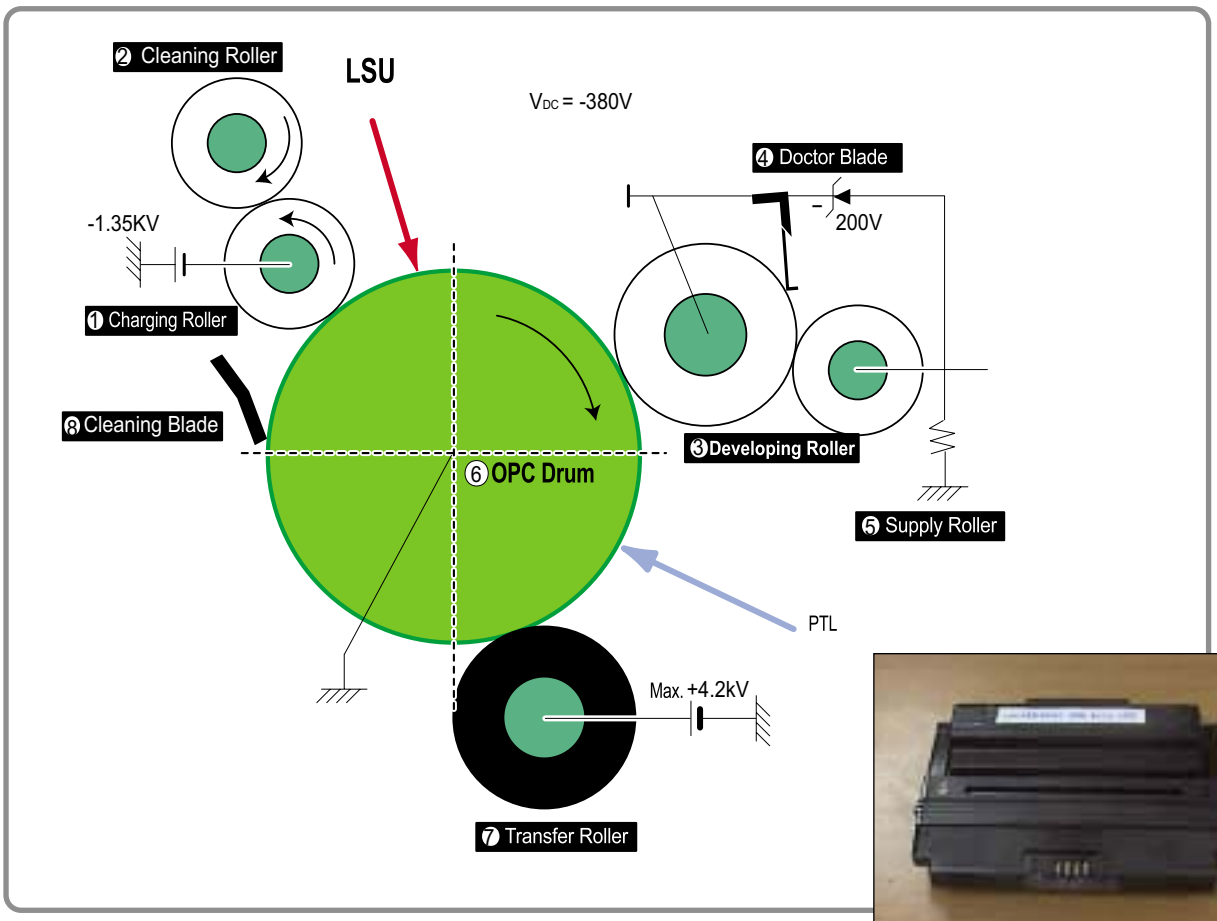

3.1.3.8 Duplex Unit

- Duplex printing function as factory option
- Available Paper : Letter, Oficio, Legal, Folio, and A4

3.1.3.9 Optional Tray (SCF)

- For customer covenience in managing paper
- Capacity : 250 sheets

3.2 Mechanical Parts Specifications

3.2.1 Frame

- Material : PC + ABS V0 NH-1000T(Cheil Industries)
- Weight : 1.0kg

3.2.2 Feeding Part

- Feeding Type: Universal Cassette Type
- Feeding Standard: Center Loading
- Feeding Qty: Cassette 250 sheets (75g/㎡, 20lb paper standard)
  MP 50 sheets (75g/ ㎡, 20lb paper standard)
  Special Media 5 sheets in MP (OHP, Envelope, Label, PostCard, Index Paper etc.)
- Separating Type: Cassette - Friction Pad Type
  MP - Friction Pad Type
- Driver Type: Driving by Gearing from Main Motor
- Pick_up Roller Driver: Solenoid
- Pick up Roller Rubber Material : EPDM+IR μ = 1.6 or more
- Pick up Velocity: 217.27mm /sec (Process : 179.7mm/sec)
- Paper detecting Sensor: Photo Sensor
- Paper Size Sensor: None
- Paper Separating Pad Material : NBB 52°, μ = 0.8~1.2
- Separating Pad Pressure: 190 gf
- Pick_up Roller RPM 139.71 RPM
- Feeding Pressure (Cassette) : 250~320 gf
  250~320 gf
- Paper Exit Type: Face Down
- Feed roller Velocity: Feed-roller Cassette; 182.34 mm /sec
  Feed-roller Frame; 180.42 mm /sec
- Feed Roller Material: Feed-roller Cassette; EPDM φ13.7 mm
  Feed-roller Frame; EPDM φ14.2 mm

3.2.3 Transfer Ass'y

It is consisted of Transfer Roller and spir gear.
The transfer roller delivers the toner of the OPC drum to the paper.

- TR Voltage : +1.3KV ±5% (based on 200㏁, in accordance with media area, Transfer table)
  -1.20KV ±10% (In cleaning)
- Transfer Efficiency : 85% or more (All envirmnment : preferable media)
- Voltage System : Voltage PWM Control System
- Transfer Roller
  - Hardness : 40° ±3° (ASKER-C)
  - Validlength : 224.2 +0.5/-0mm
  - OD : φ15.0 ±0.5mm
  - SHAFT Material : SUM -24L + Non-electrolysis Ni. Coating
- Life Span : Print over 70,000 sheets (in 15~30℃)

3.2.4 Driver Ass'y

3.2.4.1 Motor

- Spec : BLDC Φ62 + PM Φ55 Motor (2-2 Bipolar) + PM Φ42 Motor (2-2 Bipolar)
- Pull-Out Torque:
  - BLDC Φ62 : 1500 gf.cm(based on actual value) or more (1342.4rpm, 1.8A)
  - PM Φ55 : 1490gf.cm(based on actual value) or more (711pps, 0.9A)
  - PM Φ42 : 240gf.cm(based on actual value) or more (1850pps, 0.6A)
- TORQUE MARGIN (Tp/o ÷Tsys) : BLDC Φ62 Motor : 1500/1100 gf.cm=1.36
  - PM Φ55 Motor : 1490/1053 gf.cm = 1.41
  - PM Φ42 Motor: 240/165 gf.cm = 1.45
- Driving Frequency : BLDC Φ62 Motor: 1342.4 rpm(1006.8 Clock)
  - PM Φ55 Motor : 888.75 rpm(711 pps)
  - PM Φ42 Motor : 1156 .25rpm(1850 pps)
- It is a power delivery unit by gearing: BLDC Φ62 Motor ->Pickup/Feeder/Developer
  - PM Φ55 Motor -> Fuser/Exit
  - PM Φ42 Motor -> Duplex

3.2.4.2 Process Speed

- Print Speed : 28/30 PPM (based on A4/LTR)
- Opc Drum Vp : 179.7 mm/sec
- Unit Relative Velocity (Paper Speed)
  - Pickup : 217.27mm /sec, 21.72% ↑ VS OPC Vp
  - Feeder (cassette) : 182.34 mm/sec, 2.15% ↑ VS OPC Vp
  - Feeder (Frame) : 180.42 mm/sec, 1.08% ↑ VS OPC Vp
  - Transfer : 183.02 mm/sec 2.53% ↑ VS OPC Vp
  - Fuser : 177.96 mm/sec, 0.3% ↓ VS OPC Vp
- Jitter
  - Horizontal: 3σ 0.022 or less in Vision System
- Orthogonality : SPEC : ±1.0 mm or less

3.2.4.3 Acoustic Noise

- Warming Up: 49dB or less
- Printing : 54dB or less
- Copying : 55dB or less
- Stand-by : 39dB or less

3.2.5 Fixing Part (Fuser)

The fuser is consisted of the E-Coil, Heat Roller, Pressure Roller, Thermistor and Themostat.
It adheres the toner to the paper with pressure and a heat to complete the printing job.

3.2.5.1 E-Coil

- Voltage 120V : 115 ±5%
  220V : 230 ±5%
- Capacity : 1100 Watt ±25W
- Temp. Distribution : 120%

3.2.5.2 Temperature-Interception Device (Thermostat)

- Thermostat Type : Non-Contact type THERMOSTAT
- Control Temperature : 70℃ ±5℃
- THERMOSTAT-ROLLER Gap : 1.1 ±0.2mm

3.2.5.3 Temperature Detecting Sensor(Thermistor)

- Thermistor Type : FS-50003 (SEMITEC 364FL Type)
- Temperature Resistance : 7㏀(180℃)
- SYSTEM Temperature SETTING
  - Stand by : 165 ±5℃
  - Printing : 189 ±5℃(5 minutes before)
    184 ±5℃(5 minutes after)
  - Overshoot : 200℃ less
  - Overheat : 210℃ less

3.2.5.4 Heat Roller

- Length : 254mm
- Valid length : 224mm
- OD : φ 28.3 ±0.05(Coating incl., Crown 0.05~-0.15)
- Material : AL(AL5052) + PFA Coating
- Thickness : 0.9mm
- Coating Material : PFA 100%
- Coating Thickness : 20um (Thickness after abrasion)
- GND Type : H/R Bearing Grounding type By SECC Fuser lower frame

3.2.5.5 Pressure Roller

· Shaft
- Length : 251.3mm
- Material : STKM
- Thickness : Ø6(Ø12---RUBBER portion)

· Rubber
- Material : Silicon Rubber(Tubing Type : Ø32.25)
- Length : 226.4mm
- Thickness : 5.5mm(one-side)

· OD : Ø32.25±0.2(Center part Crown -0.3 ~ -0.5)

3.2.5.6 Media Separating System

Thflon Coating with SUS Plate Claw System

3.2.5.7 Safety Relevant Facts

· Proteciong device when overheating
- 1st protecting device : H/W cuts off when detecting an overheating
- 2st protecting device : S/W cuts off when detecting overheating
- 3st protecting device : Thermostat cuts off the power

· Safety device
- The power of Fuser is cut-off after front cover is open
- The overheating safety device for customer
- The surface temperature of the Fuser Cover is under 80 ℃

3.2.6 LSU (Laser Scanner Unit)

The LSU unit is controlled by video controller. It scans the video data received from video controller with laser beam by using the rotation principle of the polygon mirror to create the latent image on the OPC drum. It is the core part of LBP.

The OPC drum rotates as the same speed as the paper feeding speed. It creates the /HSYNC signal and sends it to the engine when the laser beam of the LSU reaches the end of the polygon mirror, and the engine detects the /HSYNC signal to arrange the vertical line of the image on the paper. After detecting the /HSYNC signal, the image data is sent to the LSU to arrange the its margin on the paper.

The one side of the polygon mirror is one line for scanning.

	Item	Specification	Item
Resolution		Real 600 dpi	main direction × sub direction
Spot Size	Main	75 +20/-20㎛	-beam diameter at the level of 1/e2 of intensity -at the spot location of 0, ±100㎜ of image height
	Sub	85 +25/-25㎛	
	Variation	40㎛ /50㎛	main/sub, within image height of -100 ~ +100㎜ range
LaserProperty	Wavelength	785 +10/-15㎚	at 25 ℃
	Power	0.33 ㎽±0.02㎽	at the center of image on the focal plane, with stationary condition, power supplied at DC 5 volt
	Vignetting	Min 80 %	spot power variation within image height of -100 ~ +100㎜
fθ Property	Magnification error	Max 0.7 %	based on the printable area, 216 ㎜
	Partial Magnification error	max 1.5 %	based on the 2.54㎜ width within the printable area, 216㎜
Beam Position	Deviation of main scanning	±1.0 ㎜	at the center of image
	Deviation of sub scanning	±1.0 ㎜	
Scan Line Property	Bow	Max 1 ㎜	within image height
	Skew	Max 1 ㎜	-100 ~ +100㎜ range
Sync. Property	Position	136.7 ±1.0 ㎜	distance to synchronization position from the center of image
	Pulse width	Min 5.0 ㎲ec	pulse width of synchronization
Pitch Error	Neighbor line	Max 10㎛	Pitch error in sub scanning direction within image height of -105 ~ +105㎜ range
	Within 6 lines	Max 20㎛	within image height of -105 ~ +105㎜ range

	Item	Specification	Item
Unit assembly state		5°	
Motor	Control	PWM control	external clock(TTL pulse)
	Direction of rotation		CCW
	Rotational speed	31836.6 rpm	normal rotational speed (30ppm)
	Rising time	Max 6.0sec	time to stable rotational speed
Mirror	Facet number	4 faces	
	Inner diameter	φ14.14 ㎜	
Jitter	LF	Max 0.030 %	within image height of -105 ~ +105㎜ range
	RF	Max 0.020 %	
Motor Driver	Supply voltage	24 V ±10 %	application voltage to the driving circuit of polygon motor
	Starting current	Max 2.0 A	required current for acceleration
	Running current	Max 1.0 A	required current to stable rotational speed
Scanning Property	Effective scanning width	216 ㎜	
	Scanning freq.	2,122.44 ㎐	one line scanning frequency
	Scanning time	471.15 ㎲	
	Scanning dot	5,102 dots	
	1 dot ON time	53.86 ㎱	time interval from falling 0.9VH to rising again 0.9VH
	Scanning effective	58.3%	
	Video freq.	18.5648 MHz	frequency of video data
	Process Speed	179.7 mm/s	Drum Speed
Environment	Acoustical noise	45dB	at normal operation condition, measuring at 1 m horizontal, 0.75m vertical apart
Use	Temperature	+10 ~ +50 ℃	
	Humidity	30 ~ 80 %	
Preservation	Temperature Humidity	-20 ~ +60 ℃ 10 ~ 90 %	
Size			W ×L ×H

3.2.7 Toner Cartridge

In the toner cartridge, the OPC unit and the developer unit are in a body.

The OPC unit has OPC drum and charging roller, and the developer unit has toner, toner cartridge, supply roller, developing roller, and the blade.

3.2.7.1 Summary

- Developing Method : Non magnetic 1 element contacting method
- Toner : Non magnetic 1 element shatter type toner
- The life span of toner: 4k/8k sheets (ISO 19752 5% Pattern / A4 standard)
- Toner Residual Sensor : Dot count with CRUM(CRU Monitor)
- OPC Cleaning : Collect the toner by using cleaning blade+ FILM OPC
- Handling of wasted toner : Collect the wasted toner in the cleaning frame by using cleaning blade
- OPC Drum Protecting Shutter : None
- Classifying device for toner cartridge: ID is classified by interruption of the frame channel.

3.2.7.2 Developing Roller

- Rotary Speed : 203.06 mm/sec
- Roller Bias : -220V ~ -400 ±20V
- Control Type : Bias PWM Control type
  - Structure : Mono layer
  - Valid Length : 228 mm
  - OD : φ14.07 mm ± 0.05
  - Shaft material : SUS 303
  - Life : 8,000 sheets or more

3.2.7.3 Supply Roller

- Roller Bias : -370V ~ -550V
- Control Type : Bias
  - Valid Length : 220 mm
  - OD : φ 11.2 ±0.1 mm
  - Shaft OD : φ 6 mm + 0 / -0.05
  - Driver : Gear Driver (in a direction opposed to D/R)
  - Sponge Density : 0.45 , ±0.1 g/㎥
  - Life : 8,000 sheets or more

3.2.7.4 REGULATING BLADE

- Type : Regulating toner layer by pressure
- Valid Length : 228mm
- Voltage : -420V ~ -600V

3.2.7.5 CHARGING PORTION

- Type : Conductive Roller Contact-Charge
- Rotary Velocity : 179.7 mm/sec
  - Length : 230 mm
  - OD : φ 12.0 $\pm$0.05 mm
  - Shaft OD : φ 6 + 0 / -0.05 mm
  - Driver : Gear Driver
  - Roller life : 8,000 sheets or more
- Roller Voltage : -1.25 ~ -1.70 KV

3.2.8 FAX Section

Modem Part

BLOCK DIAGRAM

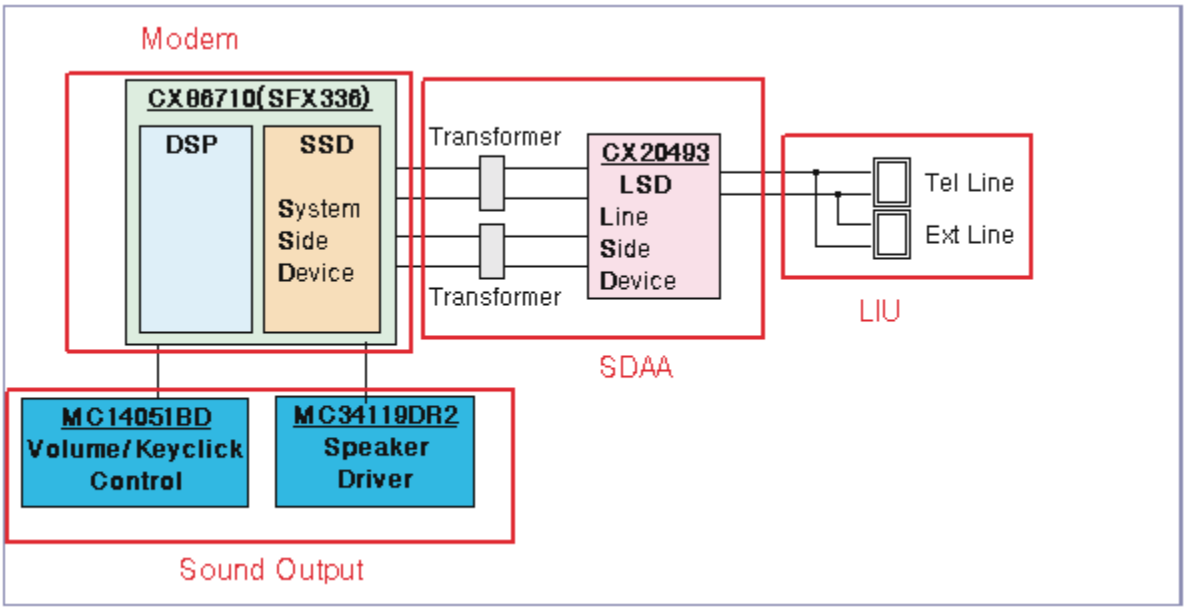

Implemented by based on Conexant DAA (Data Access Arrangement) Solution, and is roughly composed of two kinds Chip Solution

- CX86710 (SFX336): Existing Modem Chip which adds SSD (System Side Device) for interfacing between LSD and DIB of FM336Plus Core

- CX20493 (LSD) : LIU (Line Interface Unit) Chip which is controlled by SSD and satisfies each PSTN Requirements by modulating internal Configuration with connecting Tel Line.

Modem (SFX336) specification.

- 2-wire half-duplex fax modem modes with send and receive data rates up to 33,600 bps
- V.17, V.34, V.29, V.27 ter, and V.21 Channel 2
- Short train option in V.17 and V.27 ter
- PSTN session starting
- V.8 and V.8bis signaling
- HDLC support at all speeds
- Flag generation, 0-bit stuffing, ITU CRC-16 or CRC-32 calculation and generation
- Flag detection, 0-bit deletion, ITU CRC-16 or CRC-32 check sum error detection
- FSK flag pattern detection during high-speed receiving
- Tone modes and features
- Programmable single or dual tone generation
- DTMF receiver
- Tone detection with three programmable tone detectors
- Receive dynamic range:
- 0 dBm to -43 dBm for V.17, V.29, V.27 ter and V.21 Channel 2
- 9dBm to -43 dBm for V.34 half-duplex
- Digital speaker output to monitor received signal
- Two16-byte FIFO data buffers for burst data transfer with extension up to 255 bytes
- V.21 Channel 1Flag detect
- V.21 Channel 1Flag detect
- +3.3V only operation
- Typical power consumption
- Normal mode: 264 mW

Signal Transition of DAA Solution

Line Interface Signal of Tel Line and LSD is Analog Signal.

2) there is A/D, D/A Converter in LSD, so Analog Signal from Tel Line is converted in Digital through A/D Converter in DAA and transfer to SSD by DIB Capacitor
Digital Signal from SSD is converted to Analog by D/A Converter in DAA and transfer to Tel Line

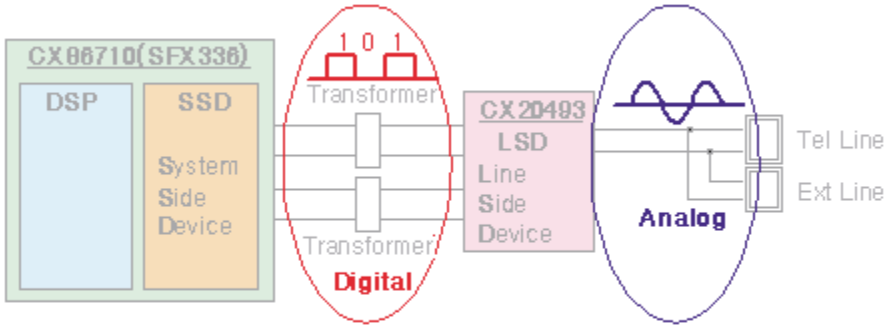

Transformer transfer Clock from SSD to LSD and Clock Frequency is 4.032MHz.

LSD full wave rectifies Clock to use as inner Power supply and also use as Main Clock for DIB Protocol Sync between LSD and SSD. Transformer transfer Clock by separating Primary and Secondary, and
amplifies Clock Level to LSD by Coil Turns Ratio 1:1.16.

■ Clock

- Clock is supplied by transformer from SSD to LSD, and there is PWROUT to adjust output impedance of Clock

Out Driver is inside SSD and CLKSHIGH Resistor to adjust duty of HLPWR Resistor and Clock.

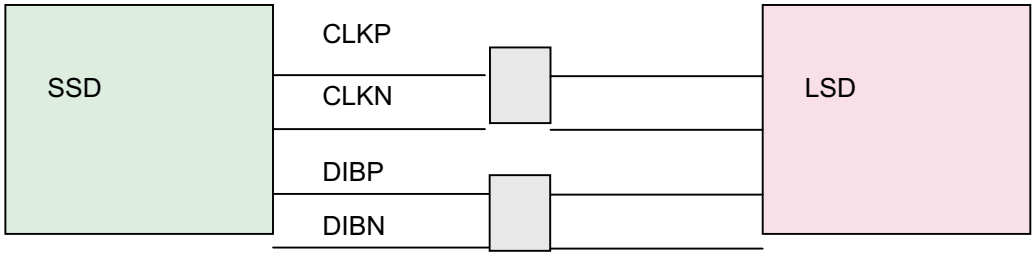

Clock from SSD to LSD has Differential structure of 180 phase difference for Noise Robustness

DIB Data transfer Data from SSD to LSD by Transformer, and also transfer specific data from LSD to SSD.

After transferring data from SSD, RSP is transferred and LSD recognizes RSP and change LSD to output Driver transfer Data to SSD.

DIB Data form SSD to LSD by Transformer has Differential structure of 180 phase difference between DIBP and DIBN for Noise Robustness

3.2.9 Line Interface Part

This is Connection Part between system and PSTN(Public Switched Telephone Network), and primary circuit is usually located. Main functions are Line Interface, Telephone Connection and Line Condition Monitoring.

1 Telephone Line Connection

① Modular Plug : RJ-11C

② LIU PBA Modular Type : 623 PCB4-4

③ Line Code Length : 2500 ± 50mm

④ Line Code Color : Black

ON HOOK state Characteristic

1) DC Resistance

① DP Dial Mode (Direct Current 30mA) : 50 ~ 300ohm

② DTMF Dial Mode (Direct Current 20mA) : 50 ~ 540ohm

2) Ring Sensitivity

① Ring detection Voltage : 40Vrms ~150Vrms (condition :Current=25mA,Frequency=15Hz)
product Margin : 30Vrms ~150Vrms

② Ring detection Frequency : 15.3Hz ~68Hz (condition : Voltage=45Vrms,Current=25mA)
product Margin : 15Hz ~70Hz

③ Ring detection Current : 20mA ~ 100mA (condition : Voltage=40Vrms,Frequency=20Hz)
product Margin : over 15mA

3) False Ring Sound

① Ring Frequency : 750 Hz + 1020 Hz

② Ring interrupt Cycle : On/Off depending on input Ring Signal Cycle.

3.2.10 Scan Part

Pictorial signal input part: output signal of CCD passes through Bypass Cap change to ADC at HT82V26, and defined signal between HT82V26 and CHORUSm processes the Image signal. When AFE accept each pixel, CDS(Correlated Double Sampling) technique which samples arm-level twice is used on each pixel by using CIP4e signal.

2) Pictorial image processing part: read CCD Pixel data in terms of 600dpi Line and process Error Diffusion Algorithm on Text mode and Photo mode, and then store Data at Scan Buffer on PC Scan mode without algorithm.

On every mode Shading Correction and Gamma Correction are executed ahead, then processing is executed later.

* Scan Image Control Specification

① Minimum Scan Line Time : 0.7062ms

② Scan Resolution : Max. 600DPI

③ Scan Width : 216mm

④ main function

- Internal 12bit ADC
- White Shading Correction
- Gamma Correction
- CCD Interface
- 256 Gray Scale

3) CCD Operating Part : CCD Image sensor use +5V and Inverter uses +24V

- CCD Maximum Operating Frequency : 10MHz
- CCD Line time : 0.7062ms
- White Data output Voltage : 0.7V ±0.5V (Mono Copy, 0.75ms/line)
- Maximum Inverter Current : 600 mA Max.(+24V)

3.2.11 OPE Pannel Section

(1) Configuration

Operations Panel uses Main Control and separated OPE Chip Micom and work as inner program,
systemic operation is serial system which exchange Date with SIO Port of Main Control. OPE Panel is approximately composed of Micom part, Matrix part and LCD.

(2) Micom controller

Micom has ROM, RAM, I/O Port built-in and displays and lights LCD by CPU command of Main Control Part and report Key recognition Data to Main Control Board.

3.2.12 Printer Section

Printer is consisted of the Engine parts and F/W, and engine parts is consisted of the mechanical parts comprising Frame, Feeding, Developing, Driving, Transferring, Fusing, Cabinet and H/W comprising the main control board, power board, operation panel, PC Interface.

The main controller is consisted of ASIC (CHORUSm) parts, Memory parts, Engine

Interface parts and it functions as Bus Control, I/O Handling, drivers & PC Interface by CPU.

The Engine Board and the Controller Board are in one united board, and it is consisted of CPU part and print part in functional aspect. The CPU is functioned as the bus control, I/O handling, drivers, and PC interface. The main board sends the Current Image, Video data to the LSU and manages the conduct of Electro photography for printing. It is consisted of the circuits of the motor (paper feed, pass) driving, clutch driving, pre-transfer lamp driving, current driving, and fan driving.

The signals from the paper feed jam sensor and paper empty sensor are directly inputted to the main board.

Printing Method:	Laser-based Electro-photography
Supported Operating Systems:	Windows 98/2000/NT4.0/ME/XP/ MAC (English only, no status monitor, web download only)
Emulation:	SPL(GDI) , PCL6, PS3
Maximum Paper Size:	Legal
Effective Printing Width:	-Letter/Legal: 208mm -A4: 202mm
Resolution: (selectable from Print Driver)	-Addressable 1200 x1200 dpi -600x600 dpi (True; no RET)
Speed:	30ppm (Letter)
Input Paper Capacity:	-Tray: 250 sheets (20 lb) -MP Tray: 50 sheets (20 lb)
Output Paper Capacity:	150 sheets (20 lb; sequenced 1 to N, face down)
Feed Direction:	Front In, Front Out (FIFO)
PC Interface:	-USB 2.0(without HUB mode) Requires 6 ft. USB Cable
Toner Cartridge:	-Toner Low Sensor: None -Toner Low Indicator: Message displayed on LCD -Cartridge Missing Indicator: Message displayed on LCD
Paper Sensing:	-Tray: “Add Paper” message displayed on LCD -MP Tray: “Add Paper” message displayed on LCD

ASIC

Items	Specification	Remark
Process	0.13um (STDH150)	
Package	- 496 PBGA (total pad number:597ea) - Function pin: about 367pins - PWR & GND pin: 130pins ((130/496) × 100 = 26.2 %) - PWR & GND pad: 204ea ((204/597) × 100 = 34.17%)	
Voltage	- Core Voltage: 1.2V - I/O Pad Voltage: 3.3V / RTC Voltage : 3V	
CPU Core	ARM 920T (I-Cache: 16KB, D-Cache-16KB)	
Operating Freq.	- CPU Core: over 300MHz - Target System Bus: 100MHz	
SDRAMC	- 32 Bits Only, 100MHz - 5 Banks (Up to 128MB per Bank) - Feed-back clock(for SDRAM read) is appended	
ROMC	4 Banks (Up to 16MB per Bank)	
IOC	6 Banks (Up to 16MB per Bank)	
DMAC	6 Channels (if not use CIP4e, 4ch is available for external DMA. if CIP4E used (a4 DMA channel use), 2ch available for external DMA)	
HPVC	- Dual / Single Beam - LVDS Pad (VDO, HSYNC) - Support A4 600dpi, multi-pass color.	
PVC	- Dual / Single Beam - LVDS Pad (VDO, HSYNC) - Support A3 1200dpi, multi-pass color.	
UART	5 Channels (Channel0 supports DMA/interrupt Operation)	
INTERRUPT	6 External Interrupts, 26 Internal Interrupts	
TIMER	6 System Timers	
CIP4e	-300/400/600/1200dpi CIS/CCD image sensor interface -Color/Mono grey image, Binary image scan support -600dpi Color/Mono Copy support -Image processing for High-End MFP, Digital Copier, -MH/MR/MMR CODEC function for fax - Scan image :(max) A4 1200dpi pixel processing, -Copy image :(max) A4 600dpi pixel processing	
NAND Flash Controller	- 8/16 Bits, H/W ECC Generation - Auto Boot Mode (using internal SRAM, 4KB)	
MAC	- 10M/100Mbps - Full IEEE 802.3 compatibility	
PPI	IEEE1284 compliant parallel port interface	
GEU	Graphic Execution Unit	

Items	Specification	Remark
RSH	Fully Hardware Rotator/Scaler/Halftoner support	
Engine Controller	- LSU Interface unit, contained APC function. - Step Motor: 4 Phase - PWM: 8 Channels - ADC: 8 Channels - BLDC clock support.	
APC	DAC(2 ea)	
I2C Controller	I2C bus(SM bus) Slave Device Support (I2C Version 2.1)	
RTC	RTC Core Voltage: 3V	
PLL	2 PLL (MAIN / (H)PVC)	

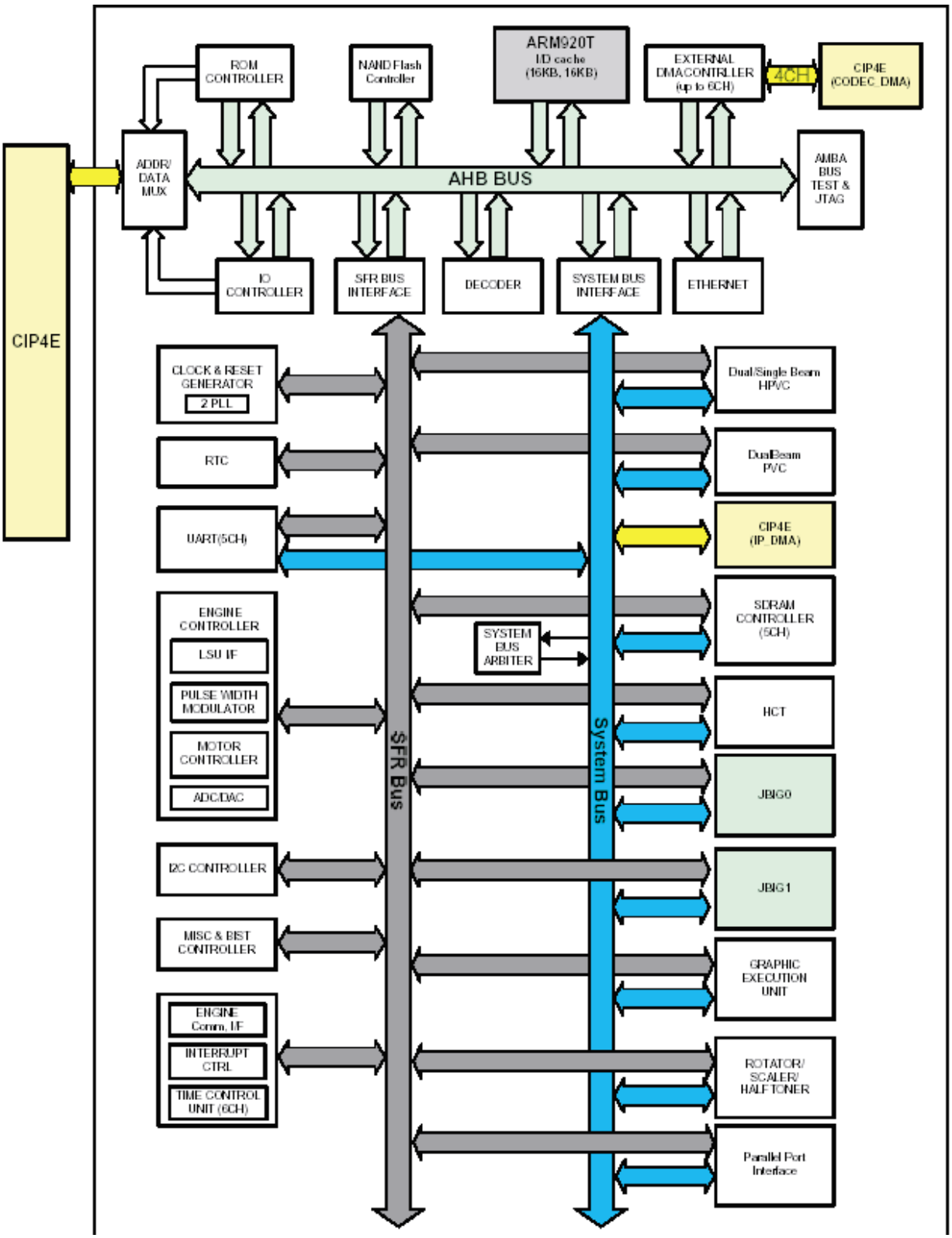
ROM CONTROLLER
NAND Flash Controller
ARM920T
I/D cache (16KB, 16KB)
EXTERNAL DMA CONTROLLER (up to 6CH)
4CH
CIP4E (CODEC DMA)
CIP4E
ADDR/ DATA MUX
AHB BUS
AMBA BUS TEST & JTAG
I/O CONTROLLER
SFR BUS INTERFACE
DECODER
SYSTEM BUS INTERFACE
ETHERNET
CLOCK & RESET GENERATOR
2 PLL
RTC
UART(5CH)
ENGINE CONTROLLER
LSU I/F
PULSE WIDTH MODULATOR
MOTOR CONTROLLER
ADC/DAC
I2C CONTROLLER
MISC & BIST CONTROLLER
ENGINE Comm. I/F
INTERRUPT CTRL
TIME CONTROL UNIT (6CH)
SYSTEM BUS ARBITER
SFR Bus
System Bus
Dual/Single Beam HPVC
DualBeam PVC
CIP4E (IP_DMA)
SDRAM CONTROLLER (5CH)
HCT
JBIG0
JBIG1
GRAPHIC EXECUTION UNIT
ROTATOR/ SCALER/ HALFTONER
Parallel Port Interface

3.2.13 Copier Section

Copy Mode:	Black and White
Scanner Type; Maximum Size of Original: (max. width = 218 mm, max length = 400 mm)	CCD with Flatbed/Platen and ADF -Platen: 216 x 297 mm -ADF: Legal (216 x 356 mm)
Optical Resolution:	600 x 600 dpi
Copy Quality - H x V: (User selectable via Content button)	-Text : 600 x 300 dpi (default) -Text/Photo : 600 x 300 dpi -Photo : 600 x 600 dpi
Supported Media Types: Copy Speed: (SDMP = Single Document, Multiple Printout, MDSP = Multiple Document, Single Printout)	Plain, Label, Cardstock, Transparency -Platen, SDMP: 30cpm (Letter) -ADF, SDMP: 30cpm (Letter) -ADF, MDSP: 20cpm (A4, Text or Text/Photo) 10cpm (A4, Photo)
Reduce/Enlarge:	-Platen: 25% - 400% (1% increments) -ADF: 25% - 100% (1% increments)
Non-printable Area:	4 mm (Top, Bottom, and each Side)
Copy Count: (Page count displayed on LCD during copy operation)	1 to 199
Copy Modes:	Text, Text/Photo, Photo
Fixed R/E Setting:	100%, Auto-fit, 2(4)-Up
Darkness Control:	3 levels
First Copy Output Time (FCOT):	-Platen: 8.5 sec. (600 x 300 dpi) -ADF: 15 sec. (600 x 300 dpi)
Duplex Copy	-Manual from MP Tray for SCX-5330N model -Automatic Duplex Copy for SCX-5530FN model

3.2.14 Telephone Section

Speed Dial:	400 Locations (46 digits maximum per location)
On-hook Dial (manual fax):	Yes
Last Number Redial:	Yes
Automatic Redial:	Yes
Pause:	Yes (using Redial key)
Ringer Volume:	Off, Low, Medium, High
Tone/Pulse:	Selectable (Tech Mode Only no Telecom certification for Pulse mode)

3.2.15 SMPS & HVPS board

The SMPS supplies DC Power to the System.
It takes 110V/220V and outputs the +5V, +24V to supply the power to the main board. The HVPS board creates the high voltage of THV/MHV/Supply/Dev and supplies it to the developer part for making best condition to display the image. The HVPS part takes the 24V and outputs the high voltage for THV/MHV/BIAS, and the outputted high voltage is supplied to the toner, OPC cartridge, and transfer roller.

1) HVPS (High Voltage Power Supply)

· Transfer High Voltage (THV+)
- Input Voltage : 24 V DC ± 15%
- Output Voltage : MAX +5.0KV ± 5 %,(Duty Variable, no loading)
  ->1.2KV ±15% (when cleaning,200 MΩ)
- Output Voltage Trigger : 6.5 μA
- Input contrast of the Voltage stability degree :under ± 5 % (fluctuating input 21.6V ~26.4V)
  Loading contrast : ± 5 % or less
- Output Voltage Rising Time : 100 ms Max
- Output Voltage Falling Time : 100 ms Max
- Fluctuating transfer voltage with environmental various : +650 V(Duty 10%) ~ 5 KV (Duty 90%)
- Environment Recognition Control Method : The THV-PWM ACTIVE is transfer active signal. It detects the resistance by recognizing the voltage value, F/B, while permits the environmental recognition voltage.
- Output Voltage Control Method : Transfer Output Voltage is outputted and controlled by changing Duty of THVPWM Signal. 10% Duty : +650V, 90% Duty : +5KV±5%

· Charge Voltage (MHV)
- Input Voltage : 24 V DC ± 15%
- Output Voltage : -1.3KV ~ -1.8KV DC ± 50V
- Output Voltage Rising Time : 50 ms Max
- Output Voltage Falling Time : 50 ms Max
- Output Loading range : 30 MΩ ~ 1000 MΩ
- Output Control Signal(MHV-PWM) : CPU is HV output when PWM is Low

· Cleaning Voltage (THV-)
- The (+) Transfer Voltage is not outputted because the THV PWM is controlled with high.
- The (-) Transfer Voltage is outputted because the THV-Enable Signal is controlled with low
- The output fluctuation range is big because there is no Feedback control.

· Developing Voltage (DEV)
- Input Voltage : 24 V DC ± 15%
- Output Voltage: -200V ~ -600V DC ±20 V
- Output Voltage Fluctuation range: PWM Control
- Input contrast of the output stability degree : ± 5 % or less
  Loading contrast : ± 5 % or less
- Output Voltage Rising Time : 50 ms Max
- Output Voltage Falling Time : 50 ms Max
- Output Loading range : 10MΩ ~ 1000 MΩ
- Output Control Signal (BIAS-PWM) : the CPU output is HV output when PWM is low.

· Supply
- Output Voltage : -400 V ~ -800V DC ±50 V(ZENER using, DEV)
- Input contrast of the output stability degree : under ± 5 %
  Loading contrast : ± 5 % or less
- Output Voltage Rising Time : 50 ms Max
- Output Voltage Falling Time : 50 ms Max
- Output Loading range : 10 MΩ ~ 1000 MΩ
- Output Control Signal (BIAS-PWM) : the CPU is HV output when PWM is low.

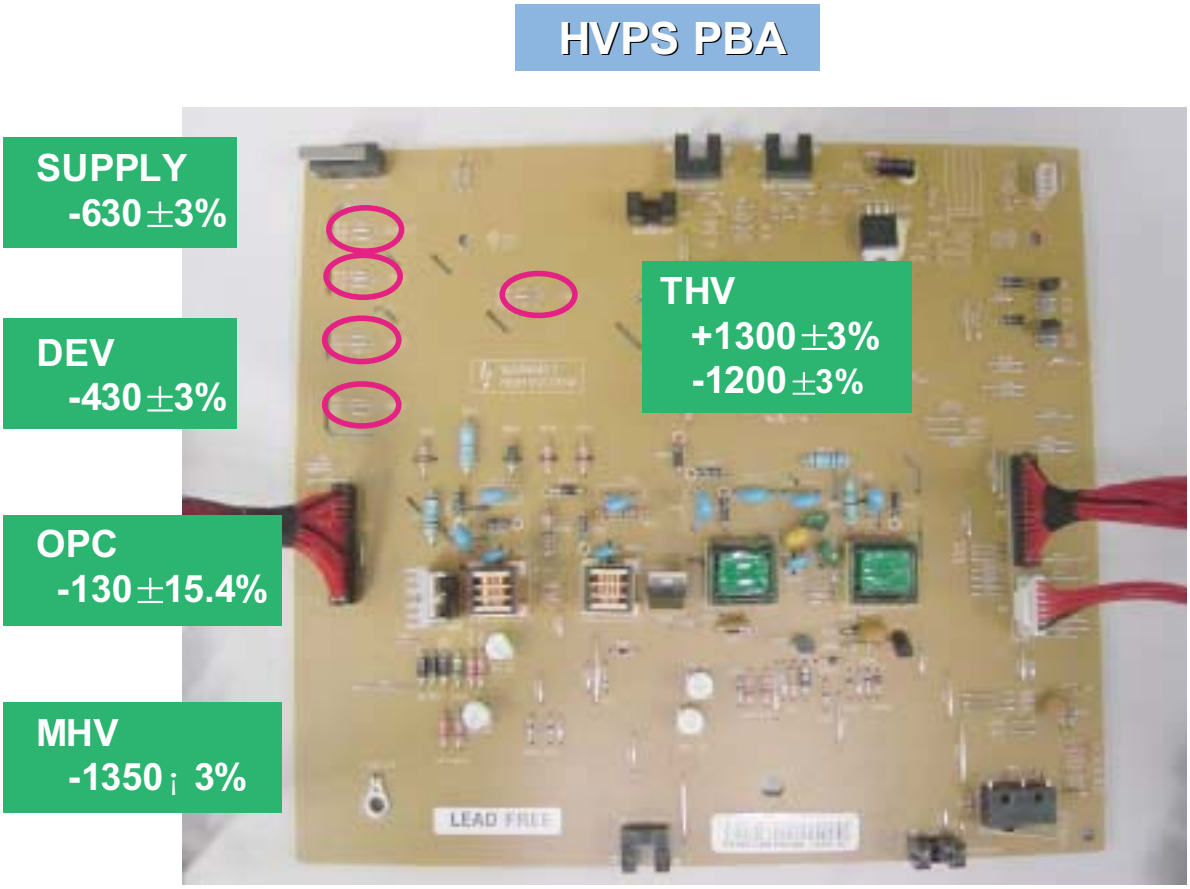

2) SMPS (Switching Mode Power Supply)

It is the power source of entire system. It is assembled by an independent module, so it is possible to use for common use. It is mounted at the side of the set.
It is consisted of the SMPS part, which supplies the DC power for driving the system, and the AC heater control part, which supplies the power to fuser. SMPS has two output channels. Which are +5V and +24V.

· AC Input

- Input Rated Voltage : AC 220V ~ 240V AC 110V ~ 127V
- Input Voltage fluctuating range : AC 198V ~ 264V AC 99V ~ 135V
- Rated Frequency : 50/60 Hz
- Frequency Fluctuating range : 47 ~ 63 Hz
- Input Current : Under 4.0Arms / 2.0Arms (But, the status when e-coil is off or rated voltage is inputted/outputted)

· Rated Output Power

NO	ITEM	CH1	CH2	Remark
1	CHANNEL NAME	+5V	+24.0V	
2	CONNECTOR PIN	CON 35V PIN: 11,13,15 GND PIN: 12,14,16	CON 324V PIN:3,5,7,9 GND PIN:4,6,8,10	
3	Rated Output	+5V ±5%(4.75 ~5.25V)	+24V ±10%(21.6 ~26.4V)	
4	Max. Output Current	3 A	4.4 A	
5	Peak Loading Current	3.6 A	5.3 A	1ms
6	RIPPLE NOISEVoltage	100mVp-p	Under 500mVp-p	
7	Maximum output	15W	105.6W	
8	Peak output	18W	127.2W	1ms
9	Protection for loading shortage and overflowing current	Shut down or Fuse Protection	Shut down or Output Voltage Drop	

· Consumption Power

NO	ITEM	System
1	Stand-By	Less than 150W
2	PRINTING	Less than 400W
3	Sleep-Mode	Less than 11W

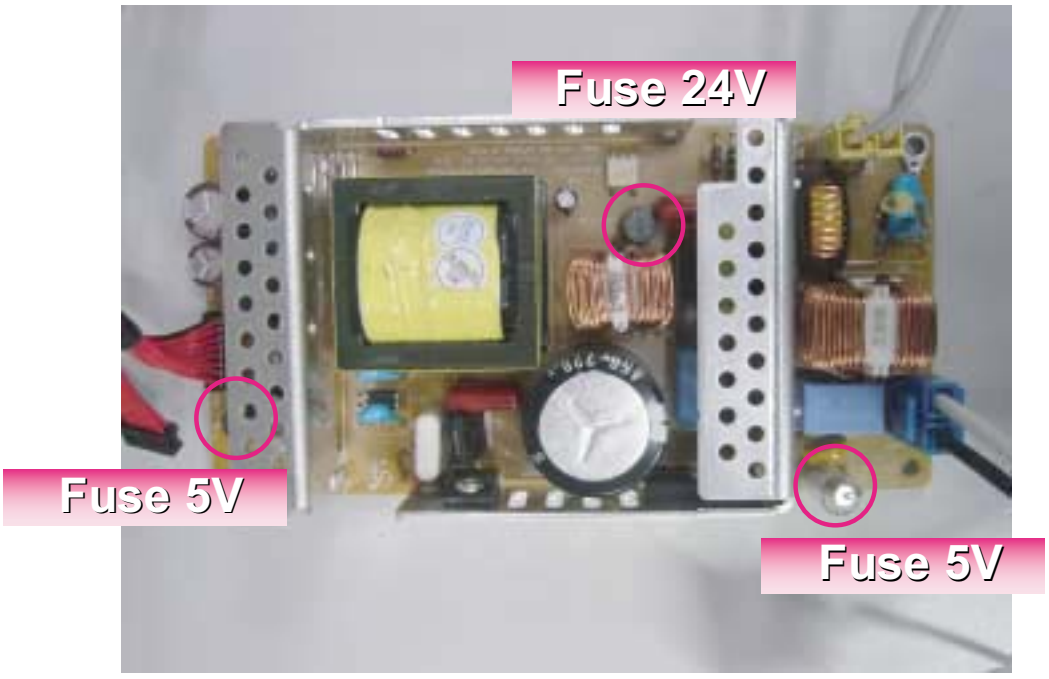

- Length of Power Cord : 1830 ±50mm
- Power Switch : Use
- Feature
  - Insulating Resistance : 100㏁ or more (at DC 500V)
  - Withstanding Voltage : Must be no problem within 1 min.
    (at 1000V-LV model / 1500Vac-HV model,10mA)
  - Leaking Current : under 3.5mA
  - Running Current : under 40A PEAK (AT 25℃, COLD START)
    under 60A PEAK (In other conditions)
  - Rising Time : within 2Sec
  - Falling Time : over 20ms
  - Surge : Bi-Wave 3kV ? Normal, 6KV - Common
- Environment Condition
  - Operating temperature range : 0℃ ~ 40℃
  - Maintaining temperature range : -25℃ ~ 85℃
  - Preserving Humidity Condition : 30% ~90% RH
  - Operating atmospheric pressure range : 1atm
- EMI Requirement : CISPR ,FCC, CE, MIC, C-Tick,
- Safty Requrement :IEC950 UL1950, CSA950, C-UL,NOM, TUV, Semko, Nemko, iK, CB, CCC(CCIB), GOST, EPA, Power Save

3) FUSER AC POWER CONTROL

Fuser(e-coil) gets heat from AC power. The AV power controls the switch with the Triac, a semiconductor switch. The ON/OFF control' is operated when the gate of the Triac is turned on/off by Phototriac (insulting part).
In other words, the AC control part is passive circuit, so it turns the heater on/off with taking signal from engine control part.
When the 'HEATER ON' signal is turned on at engine, the LED of PC501 (Photo Triac) takes the voltage and flashes. From the flashing light, the Triac part (light receiving part) takes the voltage, and the voltage is supplied to the gate of Triac and flows into the Triac. As a result, the AC current flows in the e-coil, and heat is occurred.
On the other hand, when the signal is off, the PC501 is off, the voltage is cut off at the gate of Triac, the Triac becomes off, and then the e-coil is turned off.

- Triac (Q501) feature : 24A-LV model / 16A-HV model, 600V SWITCHING
- Phototriac Coupler (PC501)
  - Turn On If Current : 15mA ~50mA(Design: 16mA)
  - High Repetive Peak Off State Voltage : Min 600V

3.3 Engine F/W

3.3.1 Control Algorithm

1) Feeding

If feeding from a cassette, the drive of the pickup roller is controlled by controlling the solenoid. The on/off of the solenoid is controlled by controlling the general output port or the external output port. While paper moves, occurrence of Jam is judged as below.

ITEM	Description
JAM 0	- After picking up, paper cannot be entered due to paper is not fed. - After picking up, paper entered but it cannot reach to the feed sensor in certain time due to slip, etc. - After picking up, if the feed sensor is not on, re-pick up. After re-picking up, if the feed sensor is not on after certain time, it is JAM 0. **It is a status that the leading edge of the paper doesn't pass the feed sensor.* -Even though the paper reaches to the feed sensor, the feed sensor doesn't be ON. **It is a status that the leading edge of the paper already passes the feed sensor.*
JAM 1	- After the leading edge of the paper passes the feed sensor, the trailing edge of the paper cannot pass the feed sensor after a certain time. (The feed sensor cannot be OFF) - After the leading edge of the paper passes the feed sensor, the paper cannot reach the exit sensor after certain time. (The exit sensor cannot be ON) **The paper exists between the feed sensor and the exit sensor.*
JAM 2	- After the trailing edge of the paper passes the feed sensor, the paper cannot pass the exit sensor after certain time.
Dup JAM 1	- After the trailing edge of the paper passes the exit sensor, the paper cannot pass the Dup sensor after certain time.
Dup JAM 0	- After the trailing edge of the paper passes the Dup sensor, the paper cannot pass the feed sensor after certain time.

2) Transfer

The charging voltage, developing voltage and the transfer voltage are controlled by PWM (Pulse Width Modulation). The each output voltage is changeable due to the PWM duty. The transfer voltage admitted when the paper passes the transfer roller is decided by environment recognition. The resistance value of the transfer roller is changed due to the surrounding environment or the environment of the set, and the voltage value, which changes due to the environments, is changed through AD converter. The voltage value for impressing to the transfer roller is decided by the changed value.

3) Fusing

The temperature change of the heat roller's surface is changed to the resistance value through the thermistor. By converting the voltage value, which impressed to the resistance, to the digital value through the AD converter, the temperature is decided. The AC power is controller by comparing the target temperature to the value from the thermistor. If the value from the thermistor is out of controlling range while controlling the fusing, the error stated in the below table occurs.

· Open Heat Error

When the engine operates the warm-up process, if the temperature of the fixing unit is not higher than a specified temperature, the engine defines Open Heat Error. When this error is broken out, the engine stops all functions and keeps the error state. Also, the engine informs the error status of the main system. And then the error message is displayed at LCD window or LED informing the error status of the user.

· Low Heat Error

When the engine is at stand-by, printing or warm-up mode, if the temperature of the fixing unit is lower than the specified temperature at each state and the lower temperature state is maintained during the specified time, the engine defines Low Heat Error. When this error is broken out, the engine stops all functions and keeps it at the error state. Also the engine informs the error status of the main system. And then the error message is displayed at LCD window or LED informing the error status of the user.

· Over Heat Error

For overall engine state, if the temperature of the fixing unit is higher than the specified temperature and the temperature state is kept during the specified time, the engine defines Over Heat Error. When this error is broken out, the engine stops all functions and keeps it at the error state. Also, the engine informs the error status of the main system. And then the error message is displayed at LCD window or LED to inform the error status of the user.

* *To recover the heat error: The heat error recovery is operated automatically when the error is only caused by Low Heat Error, not the Heat Errors in Warm-up state and the Over Heat Error. If an error happens, then the engine memorizes a present temperature. In case of Low Heat Error, the maximum heat is supplied to the fixing unit. When a specified time is elapsed, the engine detects the temperature again. If the present temperature is higher than the memorized temperature, the error is recovered. In case of Over Heat Error, no heat is supplied to the fixing unit. When a specified time is elapsed, the engine detects a present temperature again. If the present temperature is a specified degree lower than the memorized temperature, the error is recovered.*

4) LSU

LSU receives the image data from PVC or HPVC and make the latent image on OPC surface.
It uses the dual beam, LD1 and LD2. But the control method of them is the same.
Just in comparison with the single beam, the dual beam has the half of lsu' s frequency.
->The frequency of the dual beam = the frequency of the single beam /2.
The errors related to LSU are as follows:

* *By LReady: When the printing is started, the engine drives the polygon motor of LSU. After the specified time is elapsed, if the motor is not in a ready status, the engine detects the error that the polygon motor is not in a ready status. If this error happens, the engine stops all functions and keeps it at the error state. Also, the engine informs the error status of the main system and the error message is displayed at LCD window to inform the error status of the user.*

* *By Hsync: When the polygon motor is ready, the LSU sends out the signal called Hsync and used to synchronize with each image line. So, if the engine does not detect consecutively the signal for a fixed time, it defines the Hsync Error. If this error happens, the engine stops all functions and keeps it at the error state. Also, the engine informs the error status of the main system and then the error message is displayed at LCD window to inform the error status of the user.*

LSU Error Recovery: If the LReady or Hsync error happens, the paper exits out beforehand. The engine mode is changed to recovery mode and the engine informs the main system of the engine mode. And the engine checks the LSU error. If the error doesn't happen, the printing job will be proceeding.

3.4 S/W Descriptions

3.4.1 Overview

The software of Dove system is constructed with

1) Host Software part that the application software operated in Window and Web Environment, and

2) Firmware parts that is a Embedded software controls printing job.

3.4.2 Architecture

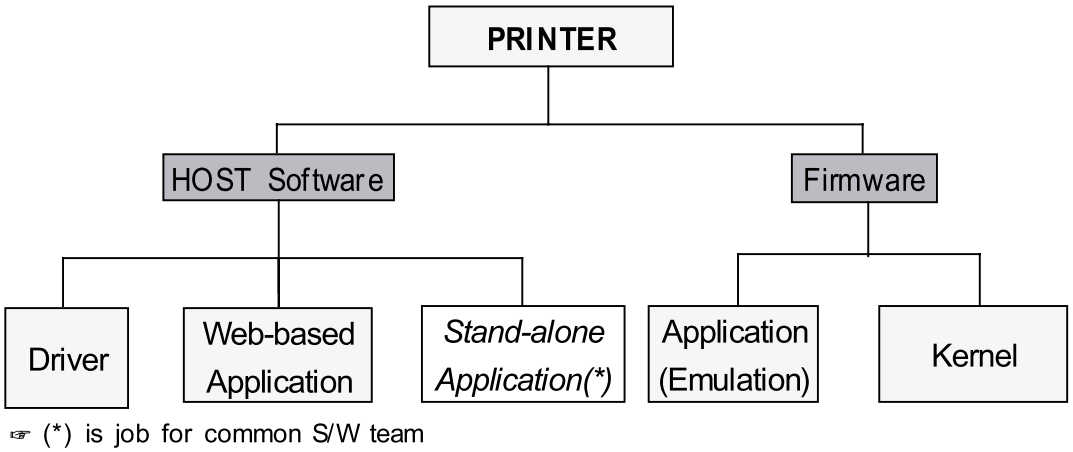

Fig. 3.4-1 SW Tree Structure

Host Software is made up of

1. Graphic User Interface that offers the various editing functions to user in Host,
2. Driver that translates the received document to a Printing Command language which printer can understand and transfers data to spooler,
3. Stand-alone Application that offers the various printing application, DMS(Document Management System), RCP(Remote Control Panel), Printer Status Monitor, Network Management in Window system,
4. Web-based-Application that offers the same functions as Stand-alone Application and RDC(Remote Diagnosis Control) in Web environment.

Firmware is made up of

1. Application (Emulation) that is a interpreter translate data received from Host to a printing language (PCL, PS, GDI, etc.) to be able to make the user to take same output as originally one what composed in Host.
2. Kernel that control and management the whole procedure include of Control flow and Printing Job before transfer to Engine system.

3.4.3 Data and Control Flow

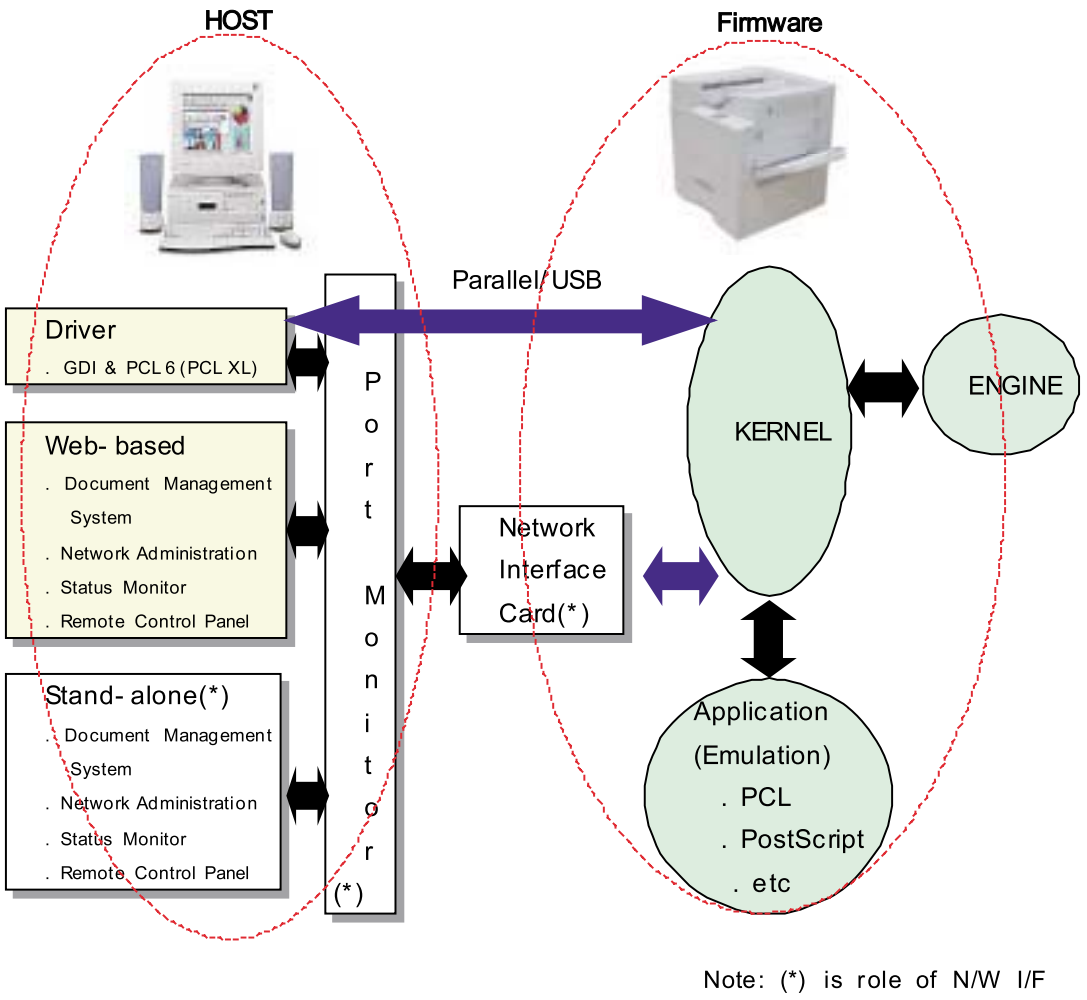

Fig. 3.4-2 Data and ControlFlow

The above Block Diagram is explained that:

Host Side is made up of

1. Driver that is Windows application software translate printed data to one of printer language and create spooler file,
2. Web-based Application that offer a various printer additional functions, management of printing job, printer administration, Status monitor to monitoring the printer status by real time in Web, independent environment on OS.
3. Stand-alone Application that is a similar Window software as same as above 2,
4. Port Monitor that manages the network communication between spooler and Network Interface Card, or various additional application and Network Interface Card,(this is, at first, make communication logical port, manage the data, transfer them from spooler to network port, and offer the result of printing).

Firmware Side is made up of

1. Network Interface Card is that relay the communication between Host and kernel using various network protocol,
2. Kernel is that manages the flow control of emulation procedure, receiving data from Host or Network card and printing with engine & rendering job,
3. Emulation is that interprets the various output data from selected emulation,
4. Engine is that prints rendered bit-map data to paper with required size and type by Kernel.

And then, for Job Spooling function for Multi-User, Multi-Printing that is occurred in Network printing and various additional printing functions, this Kernel use max. 10 Queuing systems in a memory.

In Printing, the two procedures are

(1) Case of using Parallel or USB Port

① After user start to print the wanted document to PCL string or compressed GDI bit-map data, Driver translate the all graphic data of it and send data to host spooler. And then the spooler sends the data stream to the printer via parallel port or USB port.

② Kernel receives this data from Host, and then select emulation fit to data and start selected one. After emulation job end, Kernel sends the output bit-map data to Engine using Printer Video Controller (by clock type for LSU).

③ Engine print the received data to required paper with the sequential developing process.

(2) Case of using Network Interface Card

① After user start to print the wanted document to PCL string or compressed GDI bit-map data, Driver translate the all graphic data of it and send data to host spooler.

② If so, Port monitor managing network port receives data from spooler and sends a data stream to the Network Interface Card.

③ Network interface card receives it and send to Kernel part,

④ Kernel receives this data from Host, and then select emulation fit to data and start selected one. After emulation job end, Kernel sends the output bit-map data to Engine using Printer Video Controller (by clock type for LSU).

⑤ Engine print the received data to required paper with the sequential developing process.

The additional printing function are realized in

(1) Web environment

(2) Window environment.

On addition, Kernel informs a status of printing status and printer status to user made printing job with the Status Monitor.

4. Alignment and Adjustments

This chapter describes the main functions for service, such as the product maintenance method, the test output related to maintenance and repair, DCU using method, Jam removing method, and so on. It includes the contents of manual.

4.1 Control Panel

4.1.1 SCX-5530FN

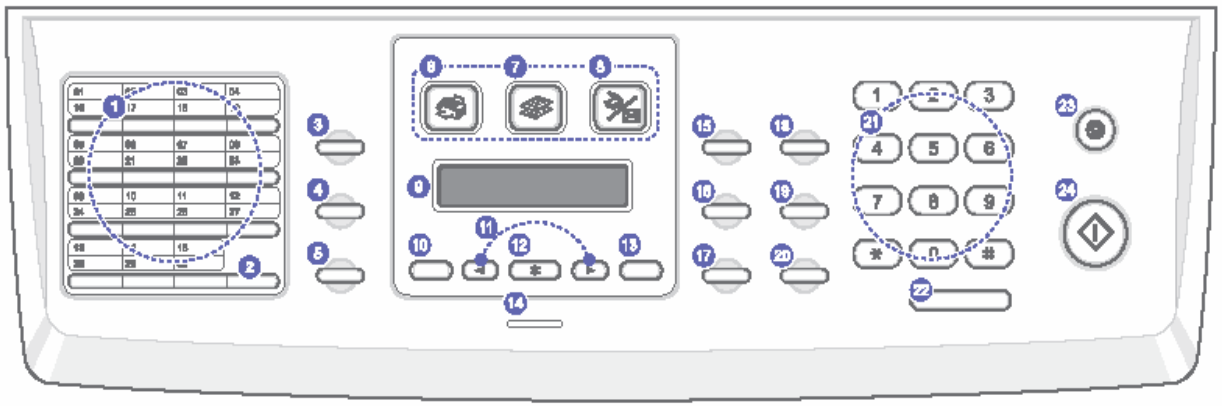

1	**Speed buttons**: Allows you to store frequently-dialed fax numbers and email addresses and enter them with the touch of a few buttons.	13	**Back**: Sends you back to the upper menu level.
2	**Shift**: Allows you to shift the speed buttons to access numbers 16 through 30.	14	**Status**: Shows the status of your machine. See page 1.5.
3	**Address Book**: Allows you to store frequently used fax numbers in memory or search for stored fax numbers or email addresses. Also allows you to print an **Address Book/Phone Book** list.	15	**Darkness**: Adjusts the document brightness for the current copy job.
4	**Resolution**: Adjusts the document resolution for the current fax job.	16	**Original Type**: Selects the document type for the current copy job.
5	**Redial/Pause**: In Standby mode, redials the last number, or in Edit mode, inserts a pause into a fax number.	17	**Reduce/Enlarge**: Makes a copy smaller or larger than the original.
6	**Fax**: Activates Fax mode.	18	**USB Print**: Allows you to directly print files stored on a USB Memory device when it is inserted into the **USB memory port** on the front of your machine.
7	**Copy**: Activates Copy mode.	19	**Duplex**: Allows you to print documents on both sides of the paper.
8	**Scan/Email**: Activates Scan mode.	20	**Toner Save**: Allows you to save on toner by using less toner in printing.
9	**Display**: Shows the current status and prompts during an operation.	21	**Number keypad**: dials a number or enters alphanumeric characters.
10	**Menu**: Enters Menu mode and scrolls through the available menus.	22	**On Hook Dial**: Engages the telephone line.
11	**Scroll** buttons: Scroll through the options available in the selected menu, and increase or decrease values.	23	**Stop/Clear**: Stops an operation at any time. In Standby mode, clears/cancels the copy options, such as the darkness, the document type setting, the copy size, and the number of copies.
12	**OK**: Confirms the selection on the screen.	24	**Start**: Starts a job.

4.1.2 SCX-5330N

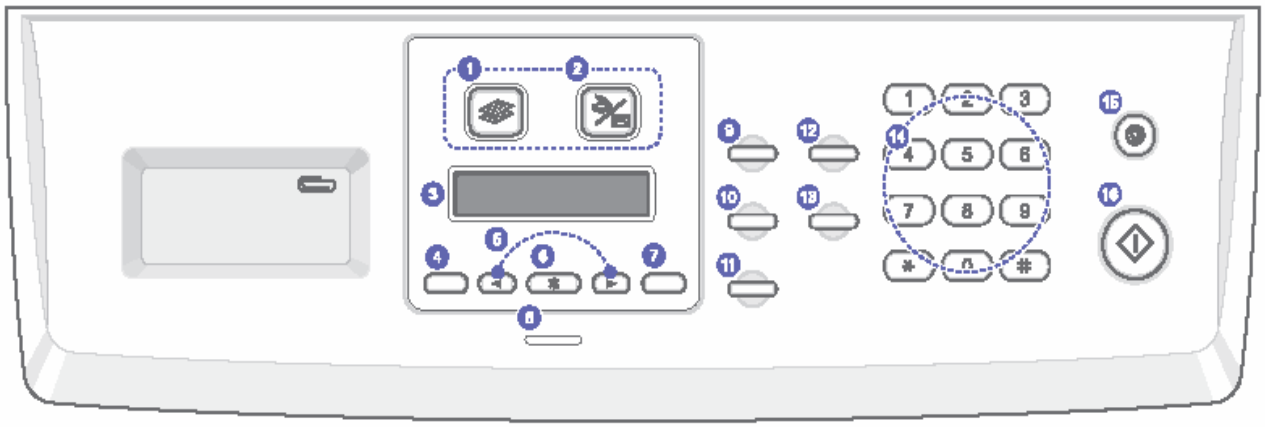

1	**Copy**: Activates Copy mode.
2	**Scan/Email**: Activates Scan mode.
3	**Display**: Shows the current status and prompts during an operation.
4	**Menu**: Enters Menu mode and scrolls through the available menus.
5	**Scroll** buttons: Scroll through the options available in the selected menu, and increase or decrease values.
6	**OK**: Confirms the selection on the screen.
7	**Back**: Sends you back to the upper menu level.
8	**Status**: Shows the status of your machine. See page 1.5.
9	**Darkness**: Adjusts the document brightness for the current copy job.
10	**Original Type**: Selects the document type for the current copy job.
11	**Reduce/Enlarge**: Makes a copy smaller or larger than the original.
12	**Address Book**: Allows you to search for stored email addresses. Also, allows you to print an **Address Book** list.
13	**Toner Save**: Allows you to save on toner by using less toner in printing.
14	**Number keypad**: Dials a number or enters alphanumeric characters.
15	**Stop/Clear**: Stops an operation at any time. In Standby mode, clears/cancels the copy options, such as the resolution, the document type setting, the copy size, and the number of copies.
16	**Start**: Starts a job.

4.2 Paper path

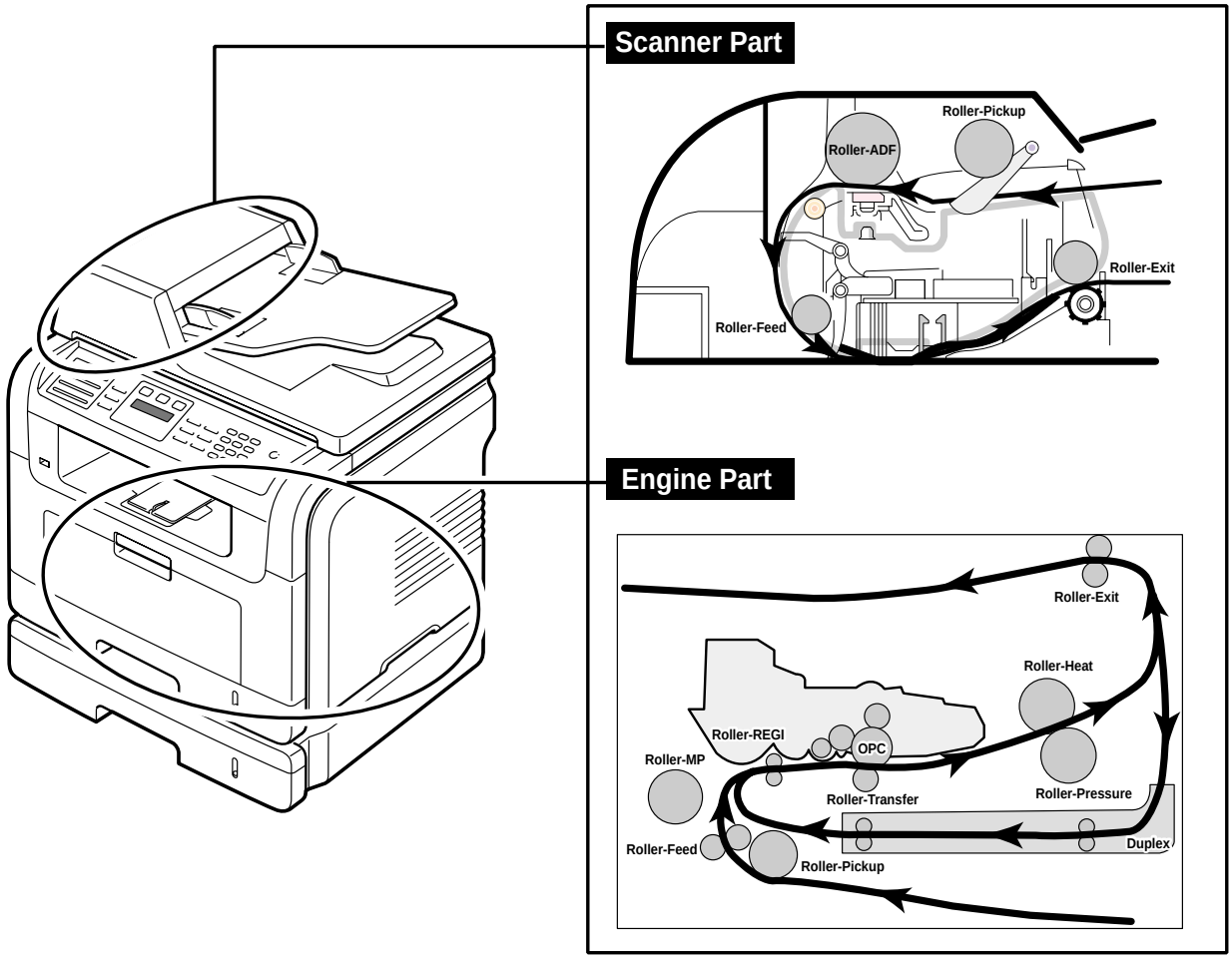

4.3 Clearing Paper Jams

Occasionally, paper can be jammed during a print job. Some of the causes include:

- The tray is loaded improperly or overfilled.
- The tray has been pulled out during a print job.
- The front cover has been opened during a print job.
- Paper was used that does not meet paper specifications.
- Paper that is outside of the supported size range was used.

If a paper jam occurs, the Jam status will be displayed on LCD panel. Find and remove the jammed paper. If you don't see the paper, open the covers.
Do not use a pinset or a sharp metal tool when removing a jam.
The covering of a metal part can be removed which can cause an electric leakage.

4.3.1 Clearing document jams

When an original jams while passing through the ADF, Document Jam appears on the display.

1. Remove any remaining pages from the ADF.

2. Open the ADF cover.

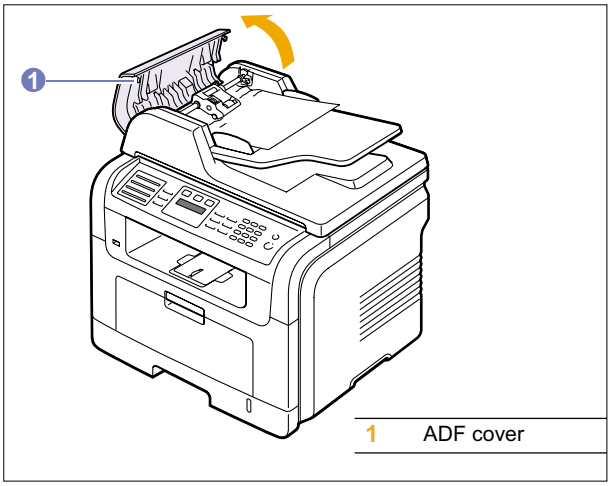

3. Pull the jammed paper gently out of the ADF.

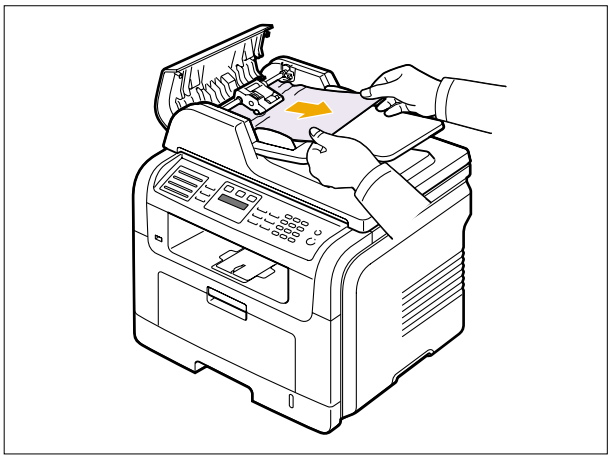

4. Close the ADF cover. Then load the removed pages, if any, back into the ADF.

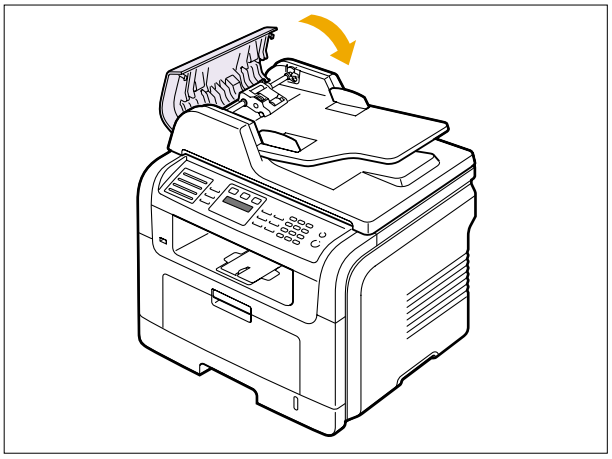

4.3.2 Roller misfeed

1. Open the scanner lid.

2. Seize the misfed paper, and remove the paper from the feed area by carefully pulling it to the right using both hands.

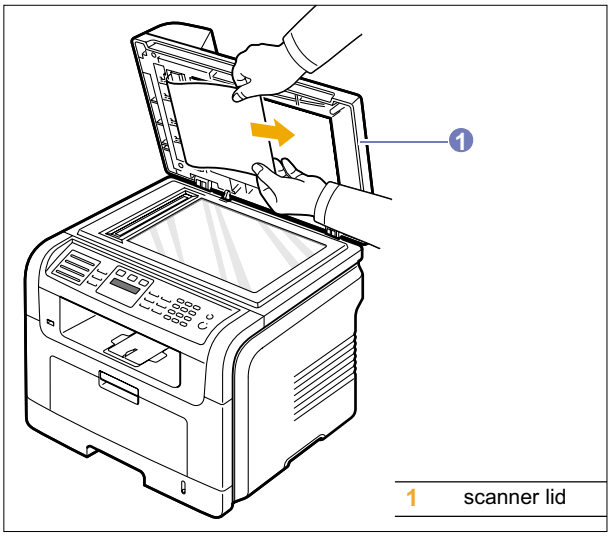

3. Close the scanner lid. Then load the removed pages back into the ADF.

Clearing paper jams

When a paper jam occurs, Paper Jam appears on the display. Refer to the table below to locate and clear the paper jam.

Message	Location of jam
[Paper Jam 0] Open/Close Door	In the paper feed area (tray 1, optional tray 2, or multi-purpose tray)
[Paper Jam 1] Open/Close Door	In the fuser area or around the toner cartridge
[Paper Jam 2] Check Inside	In the paper exit area
[Duplex Jam 0][a] **Check Inside**	In the duplex unit
[Duplex Jam 1][a] **Check Inside**	Between the duplex unit and rear cover area

a. **SCX-5530FN** only

Caution : *To avoid tearing the paper, pull out the jammed paper gently and slowly. Follow the instructions in the following sections to clear the jam.*

4.3.3 In the tray 1

1. Open and close the front cover. The jammed paper is automatically ejected from the machine.
   If the paper does not exit, go to the next step.

2. Pull the tray 1 open.

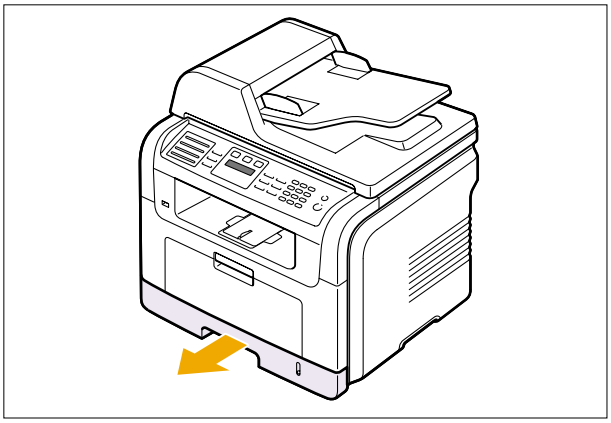

3. Remove the jammed paper by gently pulling it straight out. If the paper does not move when you pull, or if you do not see the paper in this area, check the fuser area around the toner cartridge.

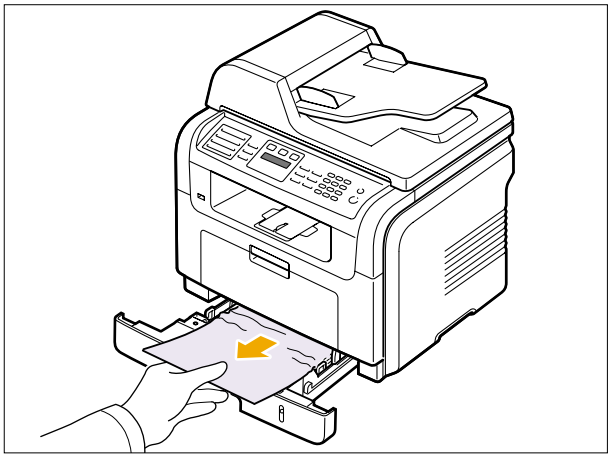

4. Insert the tray 1 into the machine until it snaps into place. Printing automatically resumes.

4.3.4 In the optional tray 2

1. Pull the optional tray 2 open.

2. Remove the jammed paper from the machine.

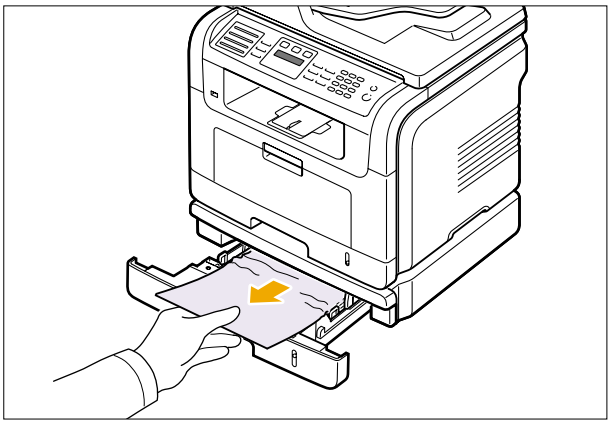

If the paper does not move when you pull, or if you do not see the paper in this area, stop and go to step 3.

3. Pull the tray 1 half.

4. Pull the paper straight up and out.

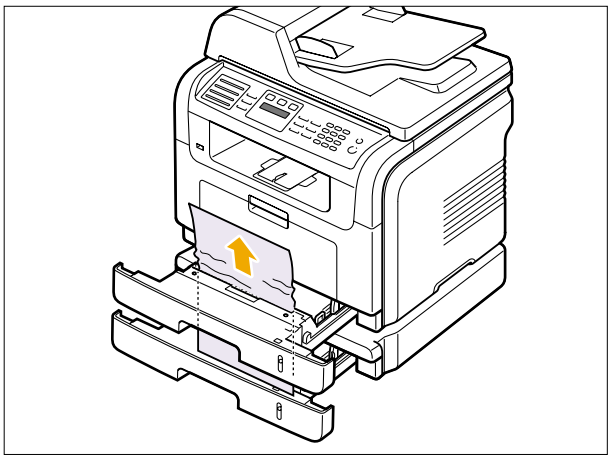

5. Insert the trays back into the machine. Printing automatically resumes.

4.3.5 In the multi-purpose tray

1. If the paper is not feeding properly, pull the paper out of the machine.

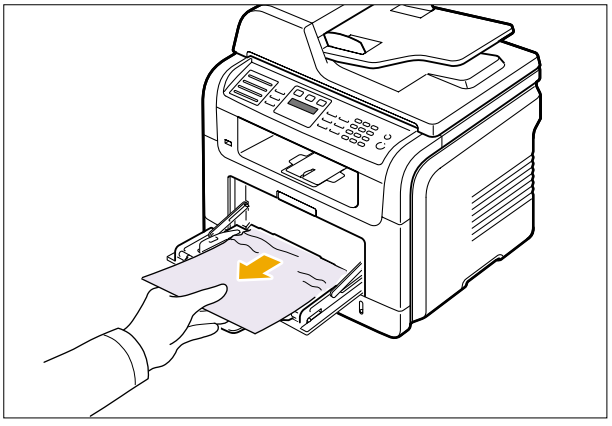

2. Open and close the front cover to resume printing.

4.3.6 In the fuser area or around the toner cartridge

Note : *The fuser area is hot. Take care when removing paper from the machine.*

1. Open the front cover and pull the toner cartridge out, lightly pushing it down.

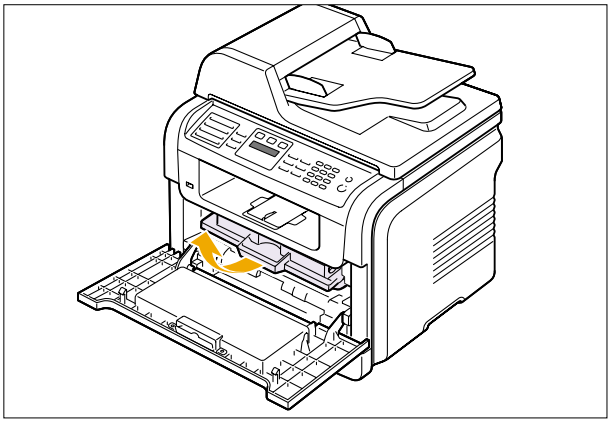

2. Remove the jammed paper by gently pulling it straight out.

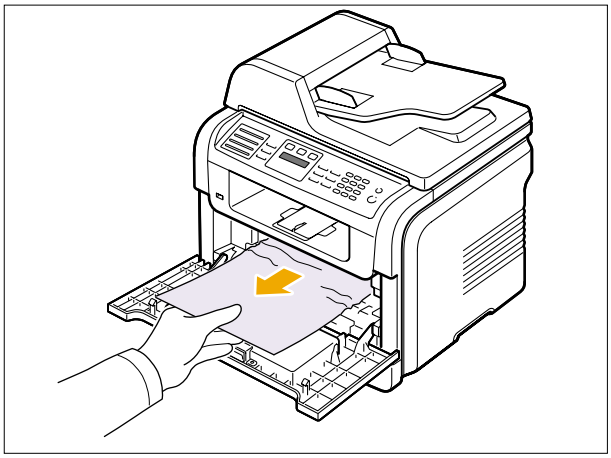

3. Replace the toner cartridge and close the front cover. Printing automatically resumes.

4.3.7 In the paper exit area

1. Open and close the front cover. The jammed paper is automatically ejected from the machine.

2. Gently pull the paper out of the output tray.

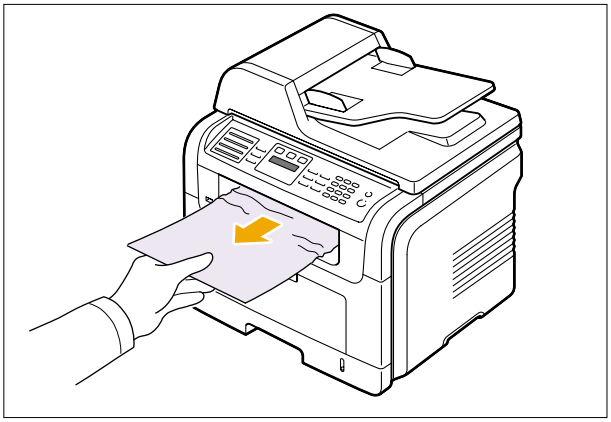

If you do not see the jammed paper or if there is any resistance when you pull, stop and go to the next step.

3. Open the rear cover.

4. If you see the jammed paper, push the pressure lever on each side up and remove the paper. Skip to step 9.

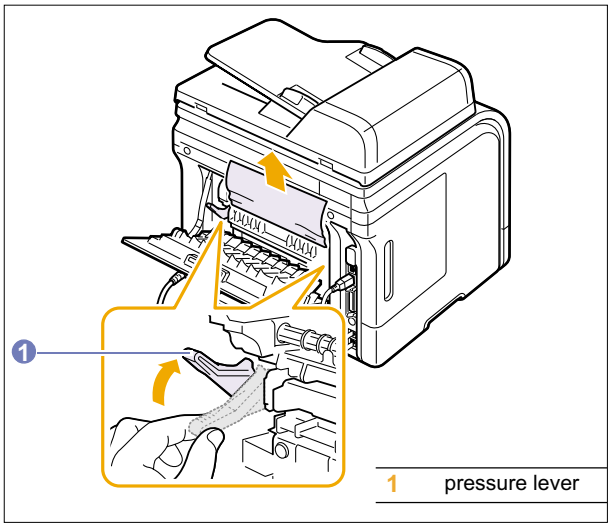

If you still do not see the paper, go to the next step.

5. Release the white strip, the rear cover stopper, and fully open the rear cover, as shown.

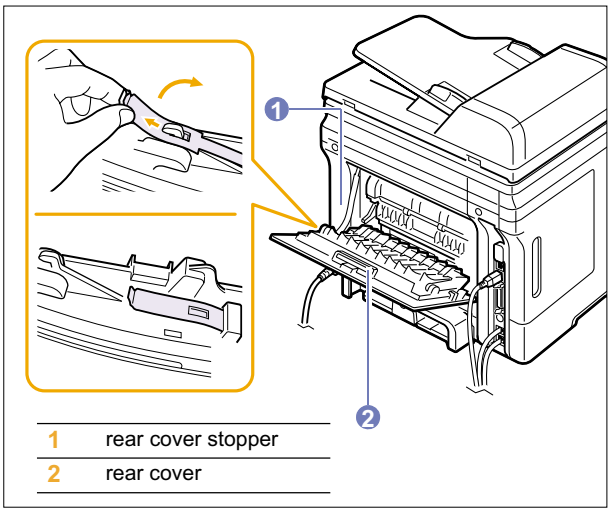

6. Unfold the duplex guide fully.

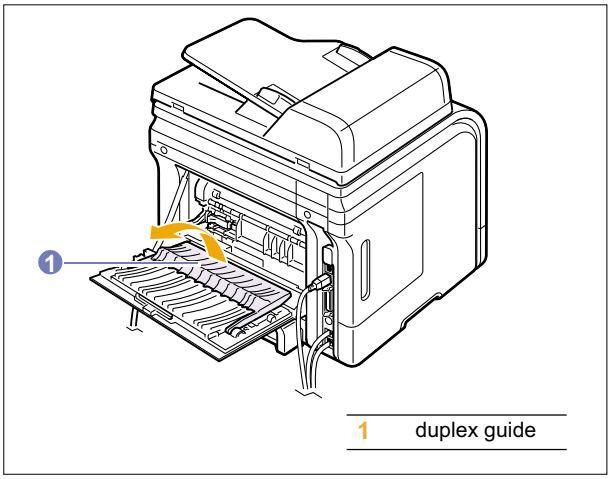

7. While pushing the fuser lever to the right, open the fuser door.

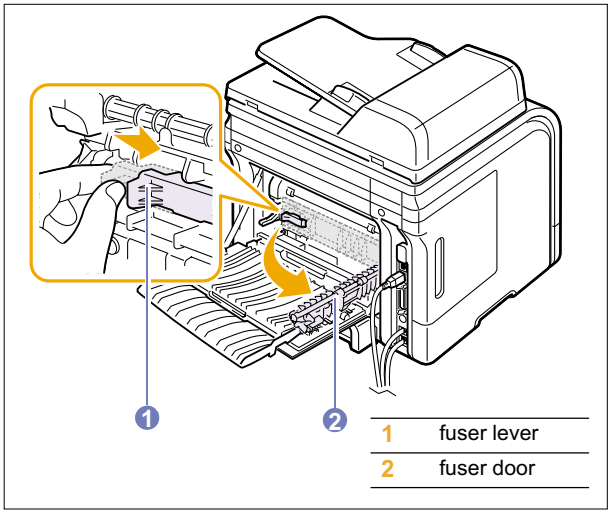

8. Pull the jammed paper out.
   If the jammed paper does not move when you pull, push the pressure lever on each side up to loose the paper, and then remove it.

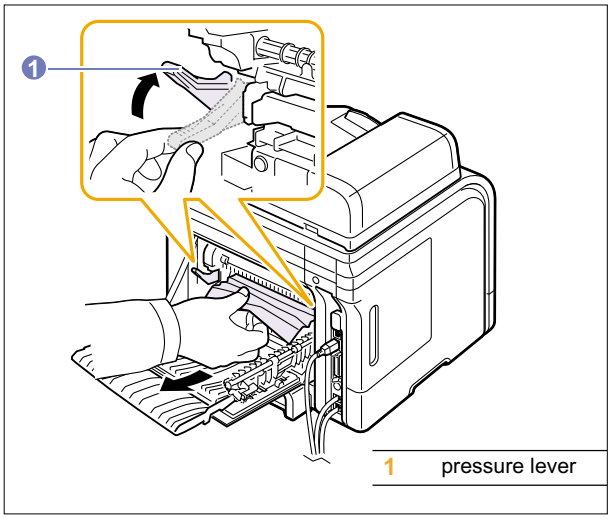

9. Return the lever, door, stopper, and guide to their original position.

10. Close the rear cover. Printing automatically resumes.

4.3.8 In the duplex unit area (SCX-5530FN only)

If the duplex unit is not inserted correctly, paper jam may occur. Make sure that the duplex unit is inserted correctly.

Duplex Jam 0

1. Pull the duplex unit out of the machine.

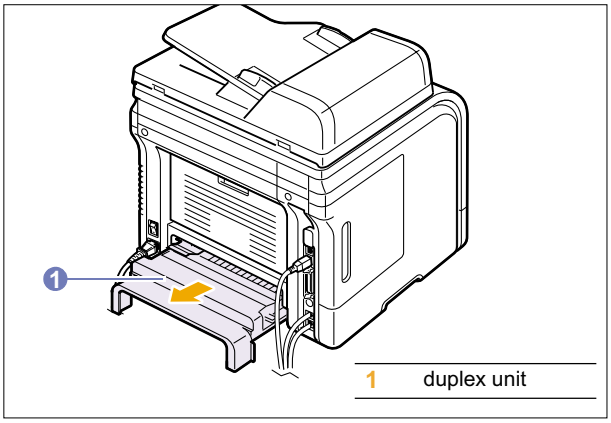

2. Remove the jammed paper from the duplex unit.

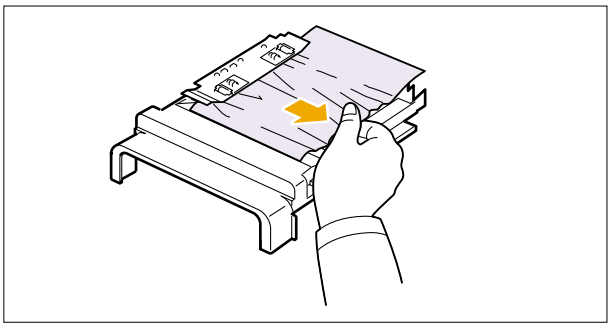

If the paper does not come out with the duplex unit, remove the paper from the bottom of the machine.

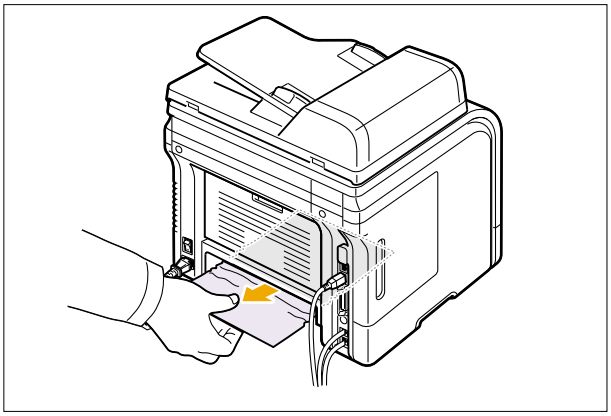

Duplex Jam 1

1. Open the rear cover.

2. Unfold the duplex guide fully.

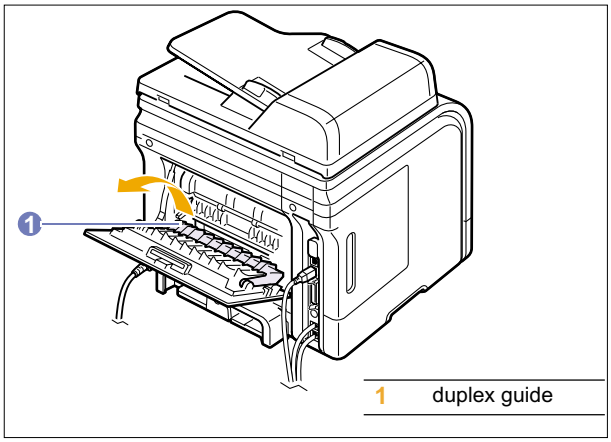

3. Pull the jammed paper out.

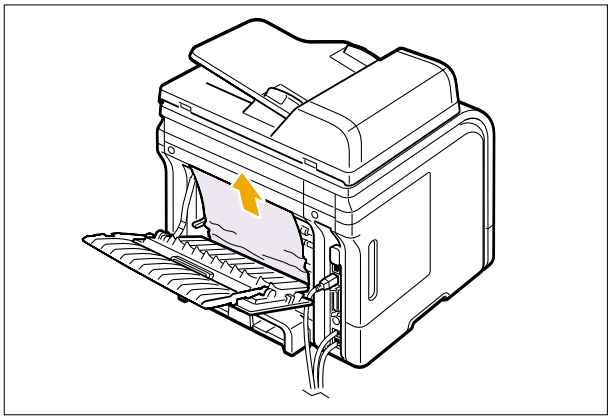

4.4 User Mode

The control panel provides access to various menus to set up the machine or use the machine's functions. These menus can be accessed by pressing Menu. Refer to the following diagram. Menus available in Fax, Copy, or Scan mode vary.

Menus in the colored characters are available only with SCX-5530FN.

4.4.1 Changing the display language

To change the language that appears on the control panel, follow these steps:

1. Press Menu until System Setup appears on the bottom line of the display and press OK.
2. Press OK when Machine Setup appears.
3. Press the Scroll buttons until Language appears and press OK.
4. Press the Scroll buttons until the language you want appears and press OK.
5. Press Stop/Clear to return to Standby mode.

4.4.2 Setting the date and time

The current date and time are shown on the display when your machine is on and ready to work. For the SCX-5530FN, all of your faxes will have the date and time printed on them.

Note : *If power to the machine is cut off, you need to reset the correct time and date once the power has been restored.*

1. Press Menu until System Setup appears on the bottom line of the display and press OK.
2. Press OK when Machine Setup appears.
3. Press the Scroll buttons until Date & Time appears and press OK.
4. Enter the correct time and date using the number keypad.

Month	= 01 to 12
Day	= 01 to 31
Year	= requires four digits
Hour	= 01 to 12 (12-hour mode) 00 to 23 (24-hour mode)
Minute	= 00 to 59

Note : *The date format may differ from country to country.*

You can also use the Scroll buttons to move the cursor under the digit you want to correct and enter a new number.

5. To select AM or PM for 12-hour format, press the * or # button or any number button.
   When the cursor is not under the AM or PM indicator, pressing the * or # button immediately moves the cursor to the indicator.
   You can change the clock mode to 24-hour format (e.g. 01:00 PM as 13:00). For details, see the next section.
6. Press OK to save the time and date.
   When you enter a wrong number, Out of Range appears and the machine does not proceed to the next step. If this happens, simply reenter the correct number.
7. Press Stop/Clear to return to Standby mode.

Changing the clock mode

You can set your machine to display the current time using either a 12-hour or 24-hour format.

1. Press Menu until System Setup appears on the bottom line of the display and press OK.
2. Press OK when Machine Setup appears.
3. Press the Scroll buttons until Clock Mode appears and press OK.
4. Press the Scroll buttons to select the other mode and press OK.
5. Press Stop/Clear to return to Standby mode.

4.4.3 Changing the default mode (SCX-5530FN only)

Your machine is preset to Fax mode. You can switch this default mode between Fax mode and Copy mode.

1. Press Menu until System Setup appears on the bottom line of the display and press OK.
2. Press OK when Machine Setup appears.
3. Press the Scroll buttons until Default Mode appears and press OK.
4. Press the Scroll buttons until the default mode you want appears and press OK.
5. Press Stop/Clear to return to Standby mode.

4.4.4 Setting sounds (SCX-5530FN only)

You can control the following sounds:

- Key Sound: Turns the key sound on or off. With this option set to On, a tone sounds each time a key is pressed.
- Alarm Sound: Turns the alarm sound on or off. With this option set to On, an alarm tone sounds when an error occurs or fax communication ends.
- Speaker: Turns on or off the sounds from the telephone line through the speaker, such as a dial tone or a fax tone. With this option set to Comm. which means “Common,” the speaker is on until the remote machine answers. You can adjust the volume level using On Hook Dial.
- Ringer: Adjusts the ringer volume. For the ringer volume, you can select Off, Low, Mid, and High.

Speaker, ringer, key sound, and alarm sound

1. Press Menu until System Setup appears on the bottom line of the display and press OK.
2. Press the Scroll buttons until Sound/Volume appears and press OK.
3. Press the Scroll buttons until the sound option you want appears and press OK.
4. Press the Scroll buttons until the desired status or volume for the sound you have selected appears and press OK.
5. If necessary, repeat steps 3 through 5 to set other sounds.
6. Press Stop/Clear to return to Standby mode.

Speaker volume

1. Press On Hook Dial. A dial tone sounds from the speaker.
2. Press the Scroll buttons until you hear the volume you want.
3. Press On Hook Dial to save the change and return to Standby mode.

Note : *You can adjust the speaker volume only when the telephone line is connected.*

4.4.5 Entering characters using the number keypad

As you perform various tasks, you may need to enter names and numbers. For example, when you set up your machine, you enter your name or your company's name, and the fax number. When you store fax numbers or email addresses in memory, you may also enter the corresponding names.

Entering alphanumeric characters

1. When you are prompted to enter a letter, locate the button labeled with the character you want. Press the button until the correct letter appears on the display.
   For example, to enter the letter O, press 6, labeled with MNO.
   Each time you press 6, the display shows a different letter, M, N, O, and finally 6.
   You can enter special characters, such as space, plus sign, and etc.
   For details, see the below section.

2. To enter additional letters, repeat step 1.
   If the next letter is printed on the same button, move the cursor by pressing the right Scroll button and then press the button labeled with the letter you want. The cursor will move to the right and the next letter will appear on the display.
   You can enter a space by pressing 1 twice.

3. When you have finished entering letters, press OK.

Keypad letters and numbers

Key	Assigned numbers, letters, or characters
1	1 Space
2	A B C 2
3	D E F 3
4	G H I 4
5	J K L 5
6	M N O 6
7	P Q R S 7
8	T U V 8
9	W X Y Z 9
0	+ - , . ' / * # & @ 0

Correcting numbers or names

If you make a mistake while entering a number or name, press the left Scroll button to delete the last digit or character. Then enter the correct number or character.

Inserting a pause

With some telephone systems, you must dial an access code (9, for example) and listen for a second dial tone. In such cases, you must insert a pause in the telephone number. You can insert a pause while you are setting up speed buttons or speed dial numbers.
To insert a pause, press Redial/Pause at the appropriate place while entering the telephone number. A - appears on the display at the corresponding location.

4.4.6 Using the save modes

Toner Save mode

Toner Save mode allows your machine to use less toner on each page.
Activating this mode extends the life of the toner cartridge beyond what one would experience in the normal mode, but it reduces print quality.
To turn this mode on or off, press Toner Save.

Note : When PC-printing, you can also turn on or off Toner Save mode in the printer properties. See the Software Section.

Power Save mode

Power Save mode allows your machine to reduce power consumption when it is not in actual use. You can turn this mode on and select a length of time for which the machine waits after a job is printed before it switches to a reduced power state.

1. Press Menu until System Setup appears on the bottom line of the display and press OK.
2. Press OK when Machine Setup appears.
3. Press the Scroll buttons until Power Save appears and press OK.
4. Press the Scroll buttons until On appears and press OK.
5. Press the Scroll buttons until the time setting you want appears and press OK.

6 Press Stop/Clear to return to Standby mode.

Scan Power Save mode

Scan Power Save mode allows you to save power by turning off the scan lamp. The scan lamp under the scanner glass automatically turns off when it is not in actual use to reduce power consumption and extend the life of the lamp. The lamp automatically wakes up after some warm-up time when you start scanning.
You can set the length of time for which the scan lamp waits after a scan job is completed before it switches to the power save mode.

1. Press Menu until System Setup appears on the bottom line of the display and press OK.
2. Press OK when Machine Setup appears.
3. Press the Scroll buttons until Scan PWR Save appears and press OK.
4. Press the Scroll buttons until the time setting you want appears and press OK.
5. Press Stop/Clear to return to Standby mode.

4.4.7 Setting print job timeout

You can set the amount of time a single print job is active before it must print.
The machine handles incoming data as a single job if it comes in within the specified time. When an error occurs while processing data from the computer and the data flow stops, the machine waits the specified time and then cancels printing if data flow does not resume.

1. Press Menu until System Setup appears on the bottom line of the display and press OK.
2. Press OK when Machine Setup appears.
3. Press the Scroll buttons until Job Timeout appears and press OK.
4. Press the Scroll buttons until the time setting you want appears and press OK.
5. Press Stop/Clear to return to Standby mode.

4.5 Tech Mode

4.5.1 How to Enter Tech Mode

In service (tech) mode, the technician can check the machine and perform various test to isolate the cause of a malfunction.

While in Tech mode, the machine still performs all normal operations.

To enter the Tech mode

To enter the Tech mode, press Menu → # → 1 → 9 → 3 → 4 → # in sequence, and the LCD briefly displays **'TECH',** the machine has entered service (tech) mode.

4.5.2 Setting-up System in Tech Mode

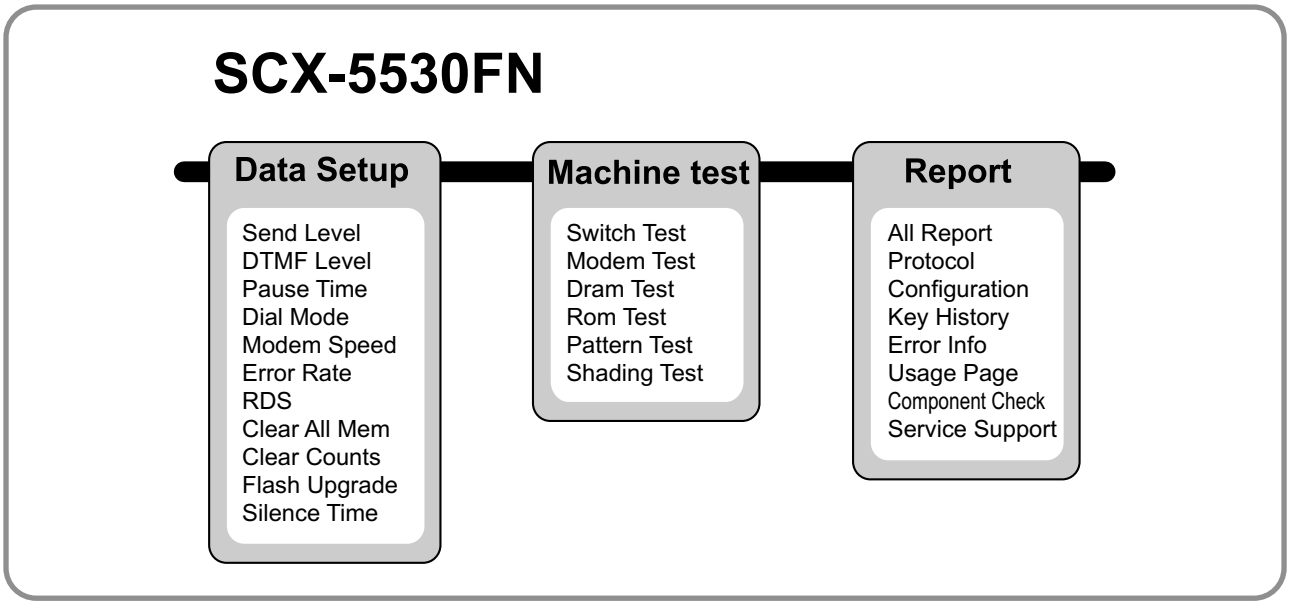

4.5.3 Data Setup

SEND LEVEL

You can set the level of the transmission signal. Typically, the Tx level should be under -12 dBm.

Caution : *The Send Fax Level is set at the best condition in the shipment from factory. Never change settings arbitrarily.*

DIAL MODE

This function can choose dial method.
*Default : Dial(Dial/Pulse)

MODEM SPEED

You can set the maximum modem speed.
Communication is done with modem speed automatically set at lower speed when communicating with a slower speed modem since communication is done on the standard of the side where modem speed is low for transmission/reception. It is best set 33.6Kbps as default setting.

ERROR RATE

When the error rate is about exceed the set value, the Baud rate automatically adjusts to 2400 bps.
This ensures that the error rate remains below the set value.
You can select the rate between 5% and 10%.

CLEAR ALL MEMORY

The function resets the system to factory default settings.
This function is used to reset the system to the initial value when the product is functioning abnormally . All the values are returned to the default values, and all the information, which was set by the user, will be erased.

< Method >

1. Select the [MEMORY CLEAR] at the TECH MODE.
2. Push the ENTER button.
3. Select you country. (There are four country groups. Refer to the table below.)
4. Push the ENTER button then it will clear all memory.

NOTICE : *Always perform a memory clear after replacing the main board. Otherwise, the system may not operate properly.*

Country Group	USA/Canada	UK	Russia	Southafrica
Country	USA/Canada Mexico Brazil	UK Germany France Italy Spain Austria Netherlands Belgium Portugal Sweden Norway Denmark Finland Switzerland Greece Ireland Turkey	Russia India Oman Poland Bangladesh Kuwait Moroco Algeria Pakistan UAE Bahrain Srilanka Saudi Arabia Chile Peru Argentina Hungary Romania Bulgaria Czech	South Africa

Flash Upgrade

The Firmware Upgrade function and has two methods, Local and Remote.

1)Local Machine Upgrade

• RCP(Remote Control Panel) mode

This method is for Parallel Port.or USB Port Connect to PC and activate RCP(Remote Control Panel) to upgrade the Firmware.

< Method >

How to Update Firmware using RCP

1. Connect PC and Printer with Parallel Cable or USB Cable.
2. Execute RCP and select Firmware Update.
3. Search Firmware file to update with Browse Icon.
4. Click Update icon, firmware file is transmitted to Printer automatically and printer is initialized when it finished.
5. Click Refresh icon and check what is updated.

• DOS Command mode

This method is just for Parallel Port. Connect to PC with Parallel cable and enter DOS Command to upgrade the Firmware

< Method >

1. The first of all, need the files : down.bat, down_com.bin, fprt.exe, and Rom File:
   file name for upgrade.Save the files in the same folder.
2. In the DOS, input as below and push the enter key. Then, it will be automatically upgraded.
3. There are two commands for the conditions of product.

* When the product is in idle condition down "rom file"
* When the product is in Ready condition (TECH MODE → DATA SETUP → FLASH UPGRADE → LOCAL) copy/b "rom file" lpt1

4. Do not turn off the power while upgrading process.

2) Remote Upgrade

This is a function that a fax with the latest firmware sends files to a fax in long distance through telephone line.

< Method >

1. Before remote upgrade, the latest firmware should be loaded into the machine.
   (TECH MODE → DATA SETUP → FLASH UPGRADE → REMOTE)
2. Input the fax number, which needs to be upgraded. (Several faxes can be upgraded at the same time. In this case, enter the each fax number.)
3. After push the enter button, send the firmware file by calling to the appointed number. (Around 10~15 minutes needs to send the file.)

< Caution >

1. sending and receiving fax must be the same model.
2. A sending fax must be set up as ECM mode, and a receiving memory must be set up as 100%. If not, the function operates abnormally

S/W of Maintenance

1. Clearing the Memory

· You can selectively clear information stored in your machine's memory.
1) Press Menu on the control panel until "Maintenance" appears on the top line of the display.
2) Press the scroll button (left-key or right-key) until you see "Clear Memory" on the bottom line and press Enter
- The first available menu item, "Clear All Mem." displays on the bottom line.
- See next page - There are some item to display on the LCD.
3) Press the scroll button (left-key or right-key) until you see the item you want to clear.
4) Press Enter. The selected memory is cleared and the display asks you to continue clearing the next item.
5) To clear another item, press Enter and repeat steps 3 and 4
- To return to Standby mode, press Stop/Clear.
- As below item you can selectively clear information stored in your machine's memory.

· Clear All Mem.:
- Clears all of the data stored in the memory and resets all of your settings to the factory default.
· Paper Setting:
- Restores all of the Paper Setting options to the factory default.
· Copy Setup:
- Restores all of the Copy Setup options to the factory default.
· Fax Setup:
- Restores all of the Fax Setup options to the factory default.
· Fax Feature:
- Cancels all of the scheduled fax jobs in the machine's memory.
- As below item you can selectively clear information stored in your machine's memory.
· Advanced Fax:
- Restores all of the Advanced Fax setting options to the factory default.
· Sound/Volume:
- Resets the sound and volume settings to the factory default.
· Machine Setup:
- Resets all of the system settings, such as the machine ID, date and time, display language and save modes, to the factory default.
· Sent Report:
- Clears all of records of your faxes sent.
· RCV Report:
- Clears all of records of your faxes received.
· Phone Book:
- Clears the one-touch, speed and group dial numbers stored in the memory.

2. Adjust shading

· When the scan unit becomes dirty, it can alter the shading value.
· If your copy has black lines or is blurred, adjust the shading setting.

1) Load a sheet of white paper into the ADF.
2) Make machine Tech mode.
3) Press Menu on the control panel and scroll until "Machine Test" displays.
4) Scroll to "Shading Test" and Enter.
5) Select "Shading&Print" appears on the bottom line and press Enter.
6) Your machine picks up the paper and adjusts the shading value.
7) After adjusting, shading value will be printed with graphic image.

3. Flash Upgrade

· The Firmware Upgrade function and has two methods, Local and Remote.

3.1 Local Machine

• RCP(Remote Control Panel) mode
This method is for Parallel Port.or USB Port Connect to PC and activate RCP(Remote Control Panel) to upgrade the Firmware.

< Method >
How to Update Firmware using RCP
1. Connect PC and Printer with Parallel Cable or USB Cable.
2. Execute RCP and select Firmware Update.
3. Search Firmware file to update with Browse Icon.
4. Click Update icon, firmware file is transmitted to Printer automatically and printer is initialized when it finished.
5. Click Refresh icon and check what is updated.

• DOS Command mode
This method is just for Parallel Port. Connect to PC with Parallel cable and enter DOS Command to upgrade the Firmware

< Method >
1. The first of all, need the files : down.bat, down_com.bin, fprt.exe, and Rom File: file name for upgrade.Save the files in the same folder.
2. In the DOS, input as below and push the enter key. Then, it will be automatically upgraded.
3. There are two commands for the conditions of product.
* When the product is in idle condition down "rom file"
* When the product is in Ready condition (TECH MODE →DATA SETUP→FLASH UPGRADE→LOCAL) copy/b "rom file " lpt1
4. Do not turn off the power while upgrading process.

3.2 Remote Upgrade
This is a function that a fax with the latest firmware sends files to a fax in long distance through telephone line.

< Method >
1. Before remote upgrade, the latest firmware should be loaded into the machine.(TECH MODE →DATA SETUP→ FLASH UPGRADE→REMOTE)
2. Input the fax number, which needs to be upgraded. (Several faxes can be upgraded at the same time. In this case, enter the each fax number.)
3. After push the enter button, send the firmware file by calling to the appointed number. (Around 10~15 minutes needs to send the file.)

< Caution >
1. sending and receiving fax must be the same model.
2. A sending fax must be set up as ECM mode, and a receiving memory must be set up as 100%. If not, the function operates abnormally

4. Remote Diagnostic System(RDS)

- RDS and FT-EGT Automatic Ordering System, will enhance the quality and the speed of after sales service and monitor the performance of the MFP at the customer site.
- MFP Should be connected by MFP Server.

4.1 Required components of RDS
RDS for MFP system consists of the following three components that communicate with each other
1. Main RDS Server connected to FAX-MODEM.
2. RDS Client Application.
3. RDS on MFP.

4.2 Enable of RDS on MFP
This value is in Tech Mode.
The factory default for Consumables Status Update / Error Proactive value is Disabled.

< Method >
1. MFP Should be connected by RDS Server.
2. Service numbers should have the proper values.
   : TECH MODE → DATA SETUP → NOTIFY TONER → 2.RDS → Service Number.
3. Machine Serial No. should have the proper values.
   : TECH MODE → DATA SETUP → NOTIFY TONER → 1.Toner → Serial No.
4. Criter value input is optional, default is set to 1000-page.
   : TECH MODE → DATA SETUP → NOTIFY TONER → 2.RDS → Criter.Value.
5. Remote Test should be On
   : Maintenance → Remote Test → On
6. Change the password : if you forgot the "Notify Toner" password, enter the new password.
   : TECH MODE → DATA SETUP → NOTIFY TONER → RDS → RDS Password.
7. If you are to enable the RDS system, "Notify Toner" option should be [Off].

4.3 Call setup & Release
In order to perform any RDS activity on a Customer MFP, the SVC will have to setup a call to it.
- On successful completion of call setup, one or more RDS functions can be executed before call release is manually initiated.
- When connecting to a device, RDS will query the MFP for serial no. If Serial No. is a zero-length string / invalid string, user will be prompted to enter a valid serial no. for the device. If the user chooses not to enter the serial number at that point, he can enter/edit it later also; Serial number will be configurable just like any other MFP parameter
- Following successful connection, following details of the MFP will be displayed :
  Tel. No, Model, Server Port (that is connected to), Status, Serial Number, Firmware Version, Engine Version, Emulation Version
- In case the established call is dropped due to an error condition, RDS Client Application will notify the user. It will then be necessary to manually request for another call setup to the desired MFP before any RDS function can be re-attempted.
- If no activity is detected on a connected call for a maximum duration of 5 minutes (300 seconds), the call will be released / disconnected from the MFP-side.

4.5.4 Machine Test

SWITCH TEST

Use this feature to test all keys on the operation control panel. The result is displayed on the LCD window each time you press a key.

MODEM TEST

Use this feature to hear various transmission signals to the telephone line from the modem and to check the modem. If no transmission signal sound is heard, it means the modem part of the main board malfunctioned.

DRAM TEST

Use this feature to test the machine's DRAM. The result appears in the LCD display.
If all memory is working normally, the LCD shows << O K >>

ROM TEST

Use this feature to test the machine'S ROM. The result and the software version appear in the LCD display.

- FLASH VER : 1.00 V
- ENGINE VER :1.00V

PATTERN TEST

Using this pattern printout, you can check if the printer mechanism is functioning properly.
It is needed in the production progress. Service person doesn't need to use it.

SHADING TEST

The function is to get the optimum scan quality by the specific character of the CCD(Charge Coupled Device). If the copy image quality is poor, perform this function to check the condition CCD unit.

< Method >

1. Select the [ADJUST SHADING] at the TECH MODE.
2. Push the SET UP button then an image will be scanned.
3. After the scan, CCD SHADING PROFILE will be print out.
4. If the printed image is different to the image, the CCD is defect.

NOTICE : *When you test CCD, make sure that the cover is closed.*

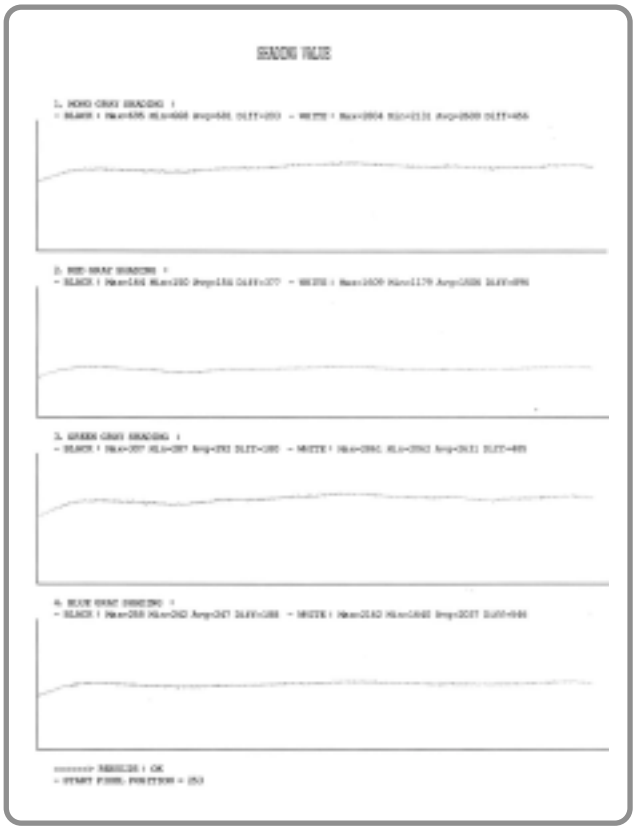

4.5.5 Report

PROTOCOL LIST

This list shows the sequence of the CCITT group 3 T.30 protocol during the most recent sending or receiving operation. Use this list to check for send and receive errors. If a communication error occurs while the machine is in TECH mode, the protocol list will print automatically.

OTHER ITEM

This list provides a list of the user system data settings and tech mode settings.

Component Check

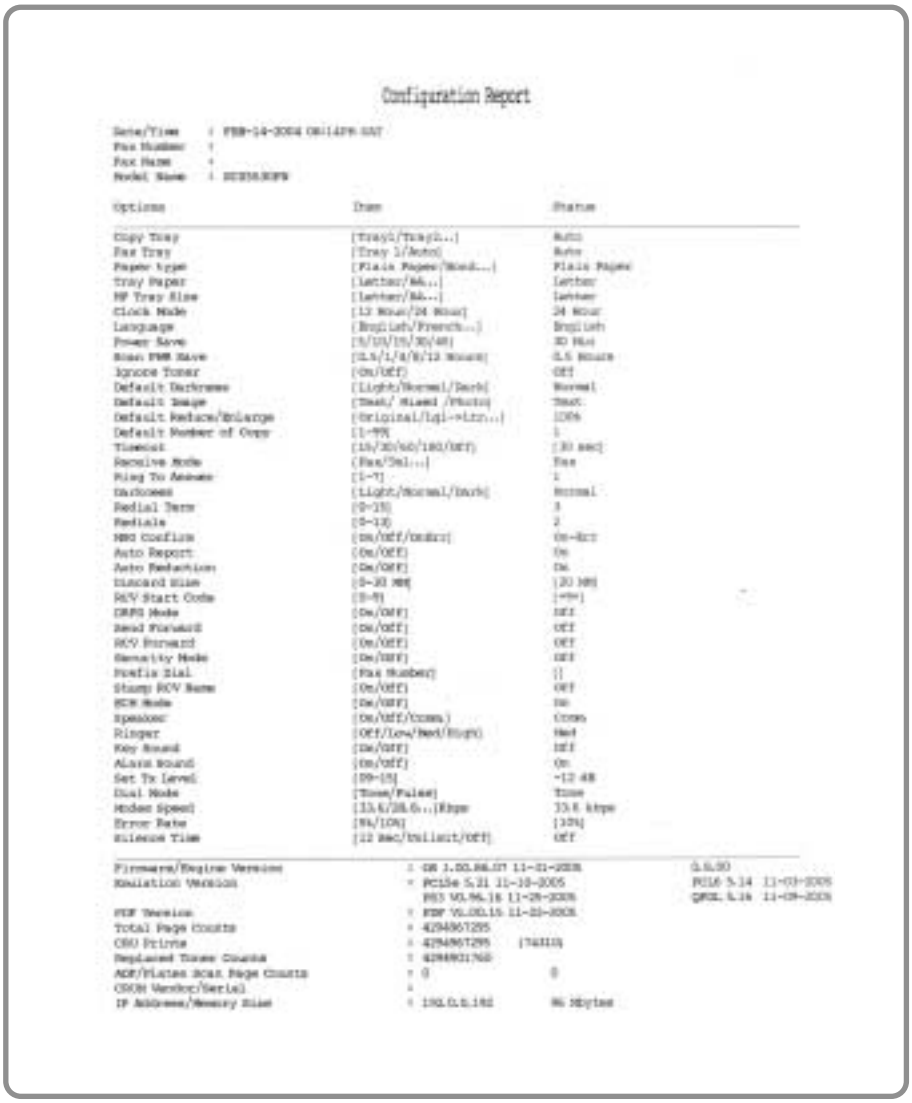

4.5.6 Detail Description

Function Name	Description	Display
01.Motor Test	The main motor keeps running after the execution key is chosen and stops when the stop key is chosen.	Main Motor On(Off)
02.Pick Up Test	automatically stops, when the execution is chosen.	Tray 1,2 Solenoid On/Off
03.Fan Test	The fan keeps running after the execution key is chosen and stops when the stop key is chosen.	Fan On(Off)
04.Manual Clutch Test	The tray2,3 clutch is on for 1sec and then it automatically stops, when the execution is chosen.On this function, the main motor runs before 2sec from the point of the clutch on in order to check the clutch state.	Tray 2,3 Clutch On/Off
11.LSU Motor	Test The laser motor keeps running after the execution key is chosen and stops when the stop key is chosen.	Laser Motor On(Off)
12.LSU Hsync Test	“Laser Leady” is displayed, When the Laser Scanning Unit is ready to print. On the other case “Laser Error”	Laser Leady On(Off)
13.LD Test	“Diode On” is displayed, when the laser diode is on. On the other case “Diode Off” is displayed.	Diode On(Off)
21.Feed Sen Test	These Functions are considered to check the present state (normal or not)of the Sensors.	"Sensor Off"to “ Sensor On ”
22.Exit Sen Test		
23.Cover Sen Test	After the cover is open, touch the sensor and confirm the message changed “Cover Open” to “ Cover Close”	"Cover Open" to "Cover Close"
24.Empty Sen Test	These Functions are considered to check the present state (normal or not)of the Sensors.	"Sensor Off"to “ Sensor On ”
25.Manual Sen Test		
31.Them ADC 180	“current value"is displayed on the upper line of the panel, and “target value"on the bottom line. Target value is limited from “191˚C” to “80˚C”	Input and output value are ADC value.(refer to the ADC table)
32.Them ADC 140		
33.Them ADC 120		
34.Them ADC 100		
41.MHV Test	These Functions are considered to check whether the control for HVPS is normal or not.	MHV On(Off)
42.Dev Bias Test		Dev Bias On(Off)
43.THV EN/NEG Test		THV EN/NEG On(Off)
44.THV ON(1300V)		THV On(Off)
45.THV ADC 1300V		ADC value displayed.
46.THV ADC 600V~3500		ADC value displayed.

4.6 Identify Sale Date

This function confirms the date that consumer bought product and used the product for the first time.
When the consumer first operate the machine, it will start a scan and page count.
The time the machine was first used is remembered.

These settings are are remembered after memory delete (Clear All Memory).

< Method >

Press MENU, #, 1, 9, 3, # in sequence.Firmware version is displayed on LCD.
Press 1(in the number keypad) : The LCD display shows "Updated date"
Press 2(in the number keypad) : The LCD display shows "Product first use date"

< Display >

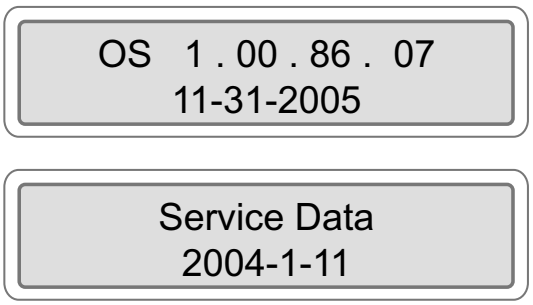

4.7 Consumables and Replacement Parts

The cycle period outlined below is a general guideline for maintenance.
The example list is for an average usage of 50 transmitted and received documents per day.
Environmental conditions and actual use will may vary.
The cycle period given below is for reference only.

COMPONENT	REPLACEMENT CYCLE
ADF Rubber Pad	20,000 Pages
ADF Roller	60,000 Pages
Pick-up Roller	150,000 Pages
Transfer Roller	70,000 Pages
Fuser	80,000 Pages
Tray Rubber Pad	150,000 Pages

4.8 Abnormal Image Printing and Defective Roller

If abnormal image prints periodically, check the parts shown below.

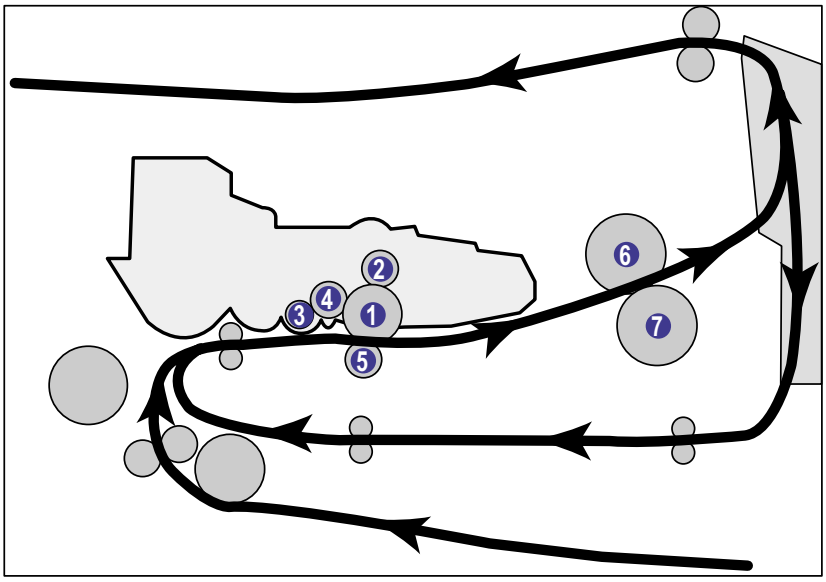

1. OPC Drum
2. Charge Roller
3. Supply Roller
4. Developing Roller
5. Transfer Roller
6. Heat Roller
7. Pressure Roller

No	Roller	Abnormal image period	Kind of abnormal image
1	OPC Drum	75.5mm	White spot, Block spot
2	Charge Roller	37.7mm	Black spot
3	Supply Roller	53.2mm	Horizontal density band
4	Develop Roller	39.2mm	Horizontal density band
5	Transfer Roller	47.1mm	Black side contamination/transfer fault
6	Heat Roller	88.9mm	Black spot and fuser ghost
7	Pressure Roller	101.3mm	Black side contamination

4.9 Display LED and Error Messages

4.9.1 Display LED

The Status LED on the control panel shows the status of your machine.
See the table below to know your machine's status.

Status		Description
Off		• The machine is off-line. • The machine is in Power Save mode. When data is received, or any button is pressed, it switches to on-line automatically.
Green	On	The machine is on-line and can be used.
	Blinking	• When the backlight slowly blinks, the machine is receiving data from the computer. • When the backlight fast blinks, the machine is printing data.
Red	On	• The toner cartridge is totally exhausted. Remove the old toner cartridge and install a new one. • A paper jam has occurred. To solve the problem. • The front cover is open. Close the front cover. • There is no paper in the tray. Load paper in the tray. • The machine has stopped due to a major error. Check the display message. for details on the meaning of the error message.
	Blinking	• A minor error occurs and the machine is waiting an error to be cleared. Check the display message. When the problem is cleared, the machine resumes. • The toner cartridge is low. Order a new toner cartridge. You can temporarily improve print quality by redistributing the toner.

4.9.2 Error Message

Messages appear on the Smart Panel program window or the control panel display to indicate the machine's status or errors. Refer to the tables below to understand the messages' meaning and correct the problem if necessary. Messages and their meanings are listed in alphabetical order.

Note : *When you call for service, it is very convenient to tell the service representative the display message.*

Messages in the colored cells are available only with SCX-5530FN.

Message	Meaning	Suggested solutions
Authentication Failed	The ID or password you entered is incorrect.	Enter the correct ID or password
Cancel? 1:Yes 2:No	Your machine's memory has become full while trying to store an original into memory.	To cancel the fax job, press the 1 button to accept Yes. If you want to send those pages that have been successfully stored, press the 2 button to accept No. You should send the remaining pageslater, when memory is available.
[COMM. Error]	The machine has a communication problem.	Ask the sender to try again.
Connection Error	Connection with the SMTP server failed.	Check the server settings and the network cable.
Connection Failed	The protocol you have entered is not supported or server port is wrong.	Check the protocol or server port.
Data Read Fail Check USB Mem.	Time expired while reading data.	Try again.
Data Write Fail Check USB Mem.	Storing to the USB memory failed.	Check the available USB memory space.
Document Jam	The loaded original has jammed in the ADF.	Clear the jam.
Door Open	The front cover or rear cover is not securely latched.	Close the cover until it locks into place.
Duplex Jam 0 Check Inside	Paper has jammed during duplex printing.	Clear the jam.
Duplex Jam 1 Open/Close Door	Paper has jammed during duplex printing.	Clear the jam.
Enter Again	You entered an unavailable item.	Enter the correct item again.

Message	Meaning	Suggested solutions
File Access Denied	Login to the network server was successful. However, access to the file on the network server was denied.	Change the server settings.
File Name Exist	The file name you have entered already exists.	Enter a different file name.
File Name Over Limit	The file names you can use are from doc001 to doc999. However, all file names are used already.	Delete unnecessary files.
File Format Not Supported	The selected file format is not supported.	Use the correct file format.
Fuser Door Open	The fuser door is not securely latched.	Open the rear cover and close the fuser door until it locks into place. For the location of the fuser door.
Group Not Available	You have tried to select a group location number where only a single location number can be used, such as when adding locations for a Multiple Send operation.	Use a speed dial number or dial a number manually using the number keypad.
[Incompatible]	The remote machine does not have the requested feature, such as polling. This message also occurs if the remote machine does not have enough memory space to complete the operation you are attempting.	Reconfirm the remote machine features.
Install Toner	A toner cartridge is not installed. or bad contact between CRUM terminals and CRUM B'd	Install a toner cartridge.
Invalid Server Address	The server address you have entered is invalid.	Enter the correct server address.
Invalid Cartridge	The toner cartridge you have installed is not compatible with your machine.	Install a Samsung-genuine toner cartridge, designed for your machine.
Line Busy	The receiving fax machine did not answer or the line is already engaged.	Try again after a few minutes.
[Line Error]	Your machine cannot connect with the receiving fax machine or has lost contact because of a problem with the phone line.	Try again. If the problem persists, wait an hour or so for the line to clear and try again. Or, turn the ECM mode on.
Invalid Toner	The toner cartridge you have installed is not for your printer.	Install a Samsung-genuine toner cartridge, designed for your printer.

Message	Meaning	Suggested solutions
Low Heat Error Cycle Power	There is a problem in the fuser unit. Unplug the power cord and plug it back in. If the problem	persists, please call for service.
LSU Motor Error Cycle Power	A problem has occurred in the LSU (Laser Scanning Unit).	Unplug the power cord and plug it back inches. If the problem persists, please call for service.
LSU Hsync Erro Cycle Power	A problem has occurred in the LSU (Laser Scanning Unit).	Unplug the power cord and plug it back inches. If the problem persists, please call for service.
Main Motor Locked	There is a problem in the main motor.	Open and then close the front cover.
Mail Exceeds Server Support	The mail size is larger than the supported size by SMTP server.	Divide your mail or reduce the resolution.
Memory Dial Full	You are trying to schedule a fax job when memory for storing fax jobs is full.	Wait until a scheduled job is completed.
Memory Full	The memory is full.	Delete unnecessary fax jobs and retransmit after more memory becomes available. Alternatively, split the transmission into more than one operation.
MP Tray Paper Empty	There is no paper in the multi-purpose tray.	Load paper in the multi-purpose tray.
Network Error	There is a problem with the network.	Contact your network administrator.
[No Answer]	The receiving fax machine has not answered after several redial attempts.	Try again. Make sure that the receiving machine is operational.
Not Assigned	The speed button or speed dial number you tried to use has no number or email address assigned to it.	Enter the number or email address manually using the number keypad or store the number or address.
[No Paper] Add Paper	The paper in the tray has run out.	Load paper in the tray.
One Page is Too Large	Single page data exceeds the configured mail size.	Reduce the resolution and try again.

Message	Meaning	Suggested solutions
Open Heat Error Cycle Power	There is a problem in the fuser unit.	Unplug the power cord and plug it back in. If the problem persists, please call for service.
Operation Not Assigned	You are in the Add Page/Cancel Job operation, but there are no jobs stored.	Check the display to see if there are any scheduled jobs.
Over Heat Error Cycle Power	There is a problem in the fuser unit.	Unplug the power cord and plug it back in. If the problem persists, please call for service.
Paper Jam 0 Open/Close Door	Paper has jammed in the feeding area of the tray.	Clear the jam.
Paper Jam 1 Open/Close Door	Paper has jammed in the fuser area.	Clear the jam.
Paper Jam 2 Check Inside	Paper has jammed in the paper exit area.	Clear the jam.
Power Failure	Power has turned off then on and the machine's memory has not been back up.	The job which you were trying to do before the power failure must be completely re-done.
Replace Toner	The toner cartridge installed is not a genuine cartridge.	Replace the toner cartridge with a new one.
Retry Redial?	The toner cartridge installed is not a genwine cartridge.	You can press OK to immediately redial, or Stop/Clear to cancel the redial operation.
Scanner locked	The scanner module is locked	Unlock the scanner and press Stop/Clear.
Self Diagnostic LSU	The LSU (Laser Scanning Unit) in your printer is checking some problems detected.	Please wait a few minutes.
Self Diagnostic Temperature	The engine in your machine is checking some problems detected.	Please wait a few minutes.
Send Error (AUTH)	There is a problem in SMTP authentication.	Configure the authentication setting.
Send Error (DNS)	There is a problem in DNS.	Configure the DNS setting.

Message	Meaning	Suggested solutions
Send Error (POP3)	There is a problem in POP3.	Configure the POP3 setting.
Send Error (SMTP)	There is a problem in SMTP.	Change to the available server.
Send Error (Wrong Config)	There is a problem on the network interface card.	Configure your networkinterfacecard correctly.
[Stop Pressed]	Stop/Clear has been pressed during a fax transmission.	Try again.
Toner Empty	The toner cartridge has run out. The machine stops printing.	Replace the toner cartridge with a new one.
Toner Low	The toner cartridge is almost empty.	Take out the toner cartridge and thoroughly shake it. By doing this, you can temporarily reestablish printing operations.
Tray 1 Paper Empty	There is no paper in the tray 1.	Load paper in the tray 1.
Tray 2 Paper Empty	There is no paper in the optional tray 2.	Load paper in the optional tray 2.
Nongenuine Toner ◀STOP▶	The toner cartridge installed is not a genuine cartridge.	You can select Stop or Gentunue. It you do not select any, the printer will workas stop is selected. If you select stop, you cannot print untill the genuine cartridge is installed. However, you can still print any kind of reports. It you select continue, you can keep printing but the guality cannot be guaranteed and the produce support is no longer provided. If you want to change the selection, turn the printer off and on to have this message appear again, and then re-select stop or continue.
Nongenuine Toner Replace Toner 1	The toner cartridge installed is not a genuine cartridge.	This message appears when you selected stop at the Non Genuine Toner prompt. Install the genuine toner cartridge.
Nongenuine Toner Replace Toner	The toner cartridge installed is not a genuine cartridge.	This message appears when you selected stop at the Non Genuine Toner prompt. Install the genuine toner cartridge.

Message	Meaning	Suggested solutions
Toner Exhausted ◀STOP▶	The life span of the toner cartridge is reached.	You can select either stop or continue. It you do not select any, the printer will as stop is selected. If you select stop, you cannot print untill the genuine cartridge is installed. If you select continue, you can keep printing but the guality cannot be guaranteed, and the product svpport is no longer provided. If you wunt to change the selection, turn the printer off and on to gave this message apper again, and then re-select stop or continue.
Toner Exhausted Replace Toner 1	The life span of the toner cartridge is reached.	This message appears when you selected stop at the Toner Exhausted prompt. Install the genuine toner cartridge.
Toner Exhausted Replace Toner	The life span of the toner cartridge is reached.	This message appears when you selected continue at the Toner Exhausted prompt. Install the genuine toner cartridge.

5. Disassembly and Reassembly

5.1 General Precautions on Disassembly

When you disassemble and reassemble components, you must use extreme caution. The close proximity of cables to moving parts makes proper routing a must.
If components are removed, any cables disturbed by the procedure must be restored as close as possible to their original positions. Before removing any component from the machine, note the cable routing that will be affected.

Whenever servicing the machine, you must perform as follows:

1. Check to verify that documents are not stored in memory.
2. Be sure to remove the toner cartridge before you disassemble parts.
3. Unplug the power cord.
4. Use a flat and clean surface.
5. Replace only with authorized components.
6. Do not force plastic-material components.
7. Make sure all components are in their proper position.

Releasing Plastic Latches

Many of the parts are held in place with plastic latches. The latches break easily; release them carefully.
To remove such parts, press the hook end of the latch away from the part to which it is latched.

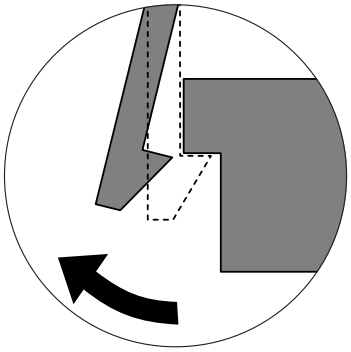

5.2 Cover Upper (Left, Right)

1. Open the ADF Ass'y.

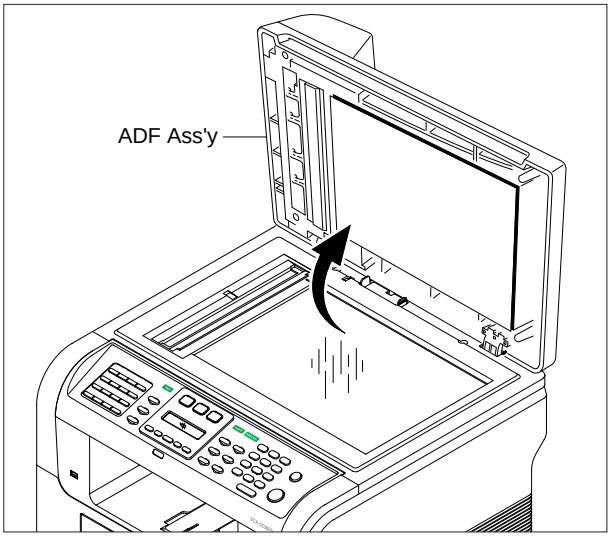

2. Apply light pressure to the left side of the Cover Upper Left and pull it in the direction of arrow, as shown below.

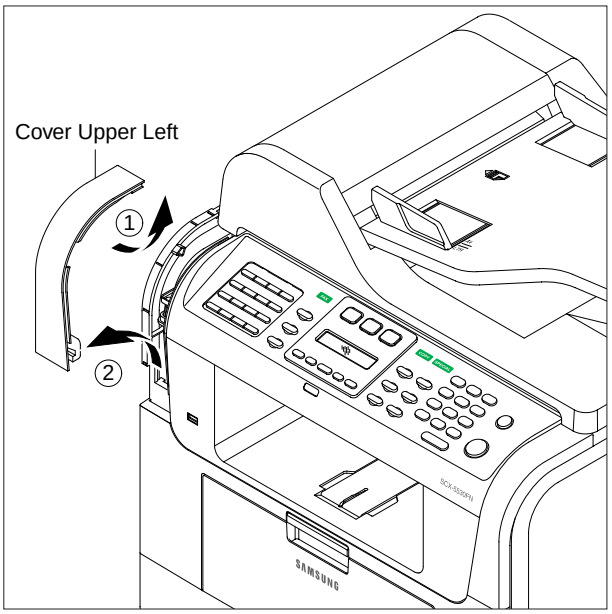

3. Apply light pressure to the right side of the Cover Upper Right and pull it in the direction of arrow, as shown below.

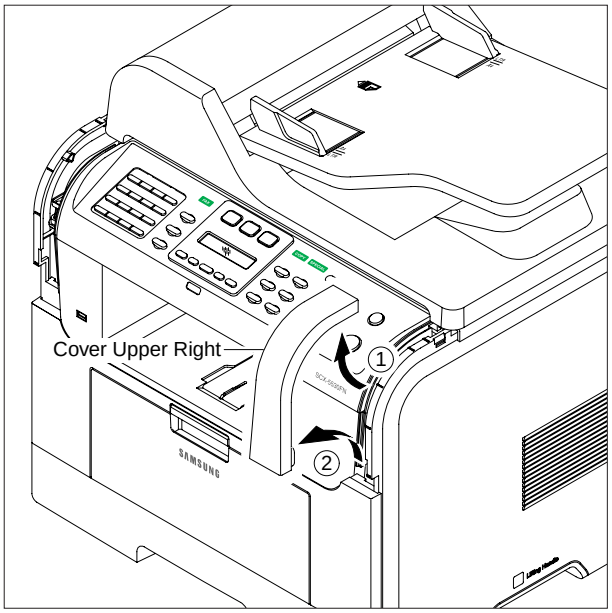

5.3 Front Cover

1. Take out the Cassette.

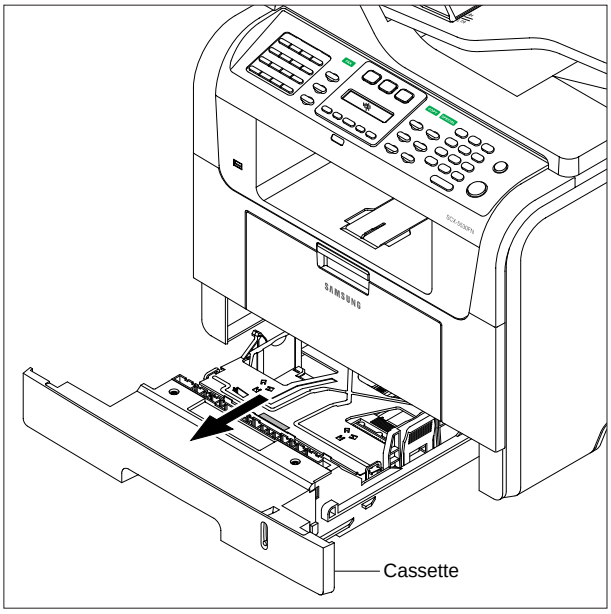

2. Open the Cover.

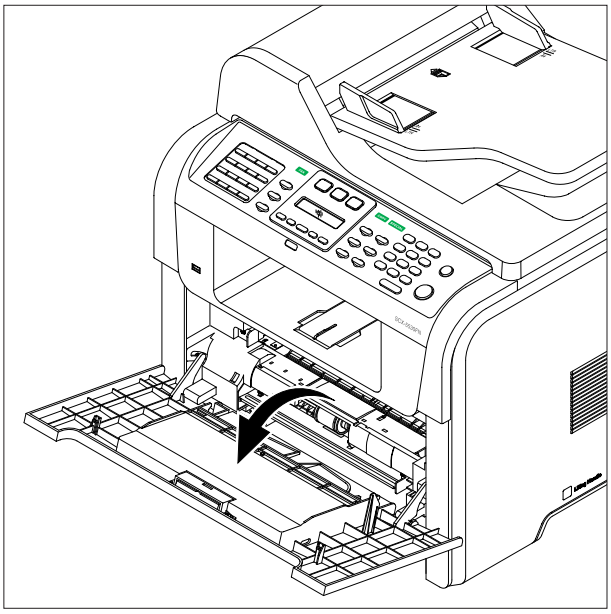

3. If necessary, remove the Toner Cartridge.

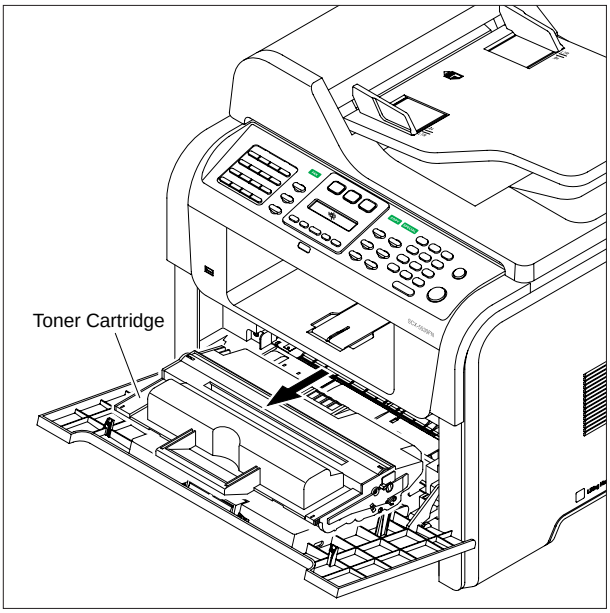

4. To remove the Front Cover, first pull the part below the both side of the Front Cover with a light pressure to the direction of arrow.

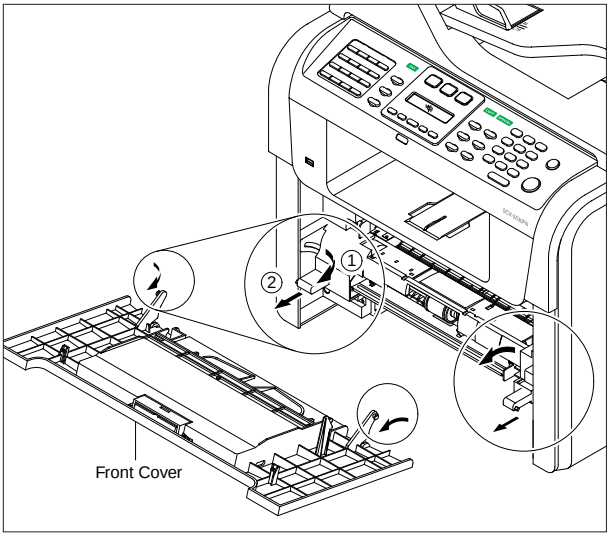

5.4 MP Tray Ass'y

1. Open the MP Tray Ass'y

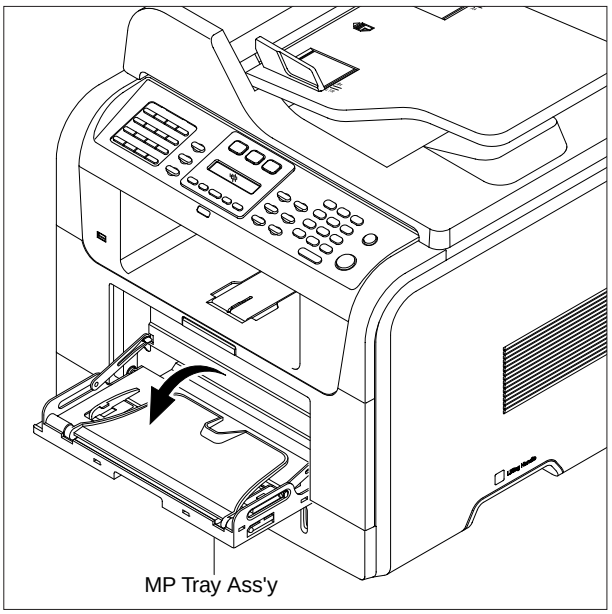

2. Pull the Tray Links from the both side of the Front Cover with a light pressure to the direction of arrow.

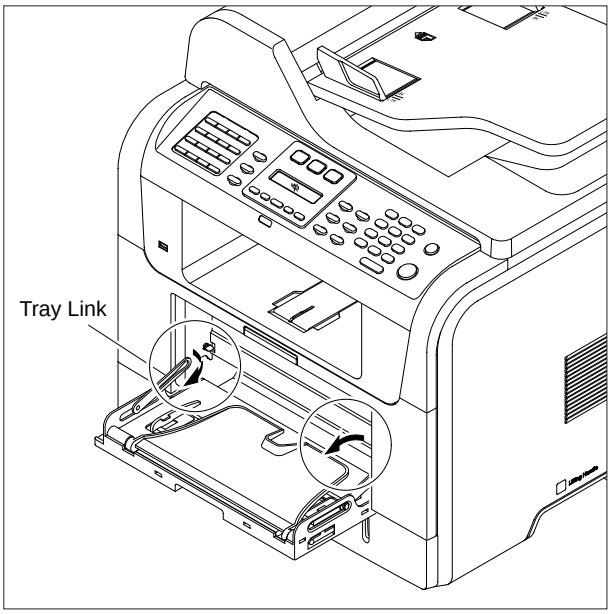

3. Apply light pressure to the both side of the MP Tray Ass'y and pull it in the direction of arrow, as shown below.

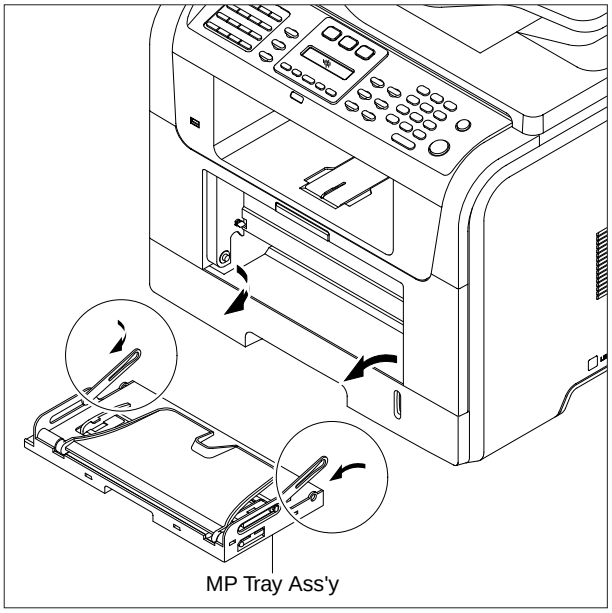

5.5 Rear Cover

1. Take out the Duplex Unit.

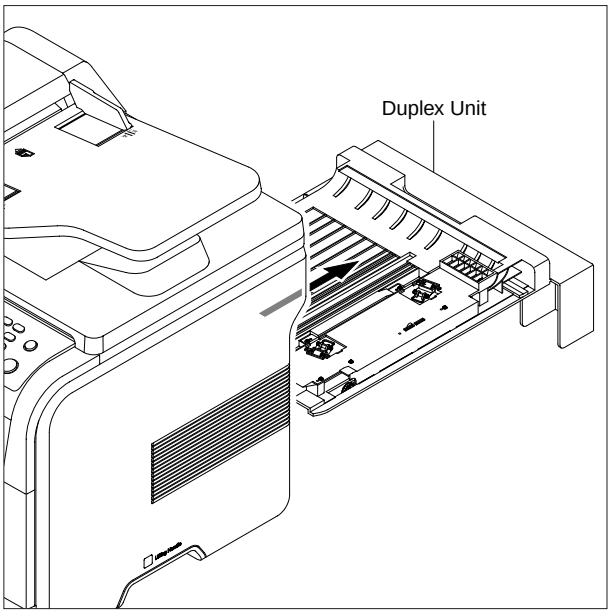

2. Remove the four screws securing the Rear Cover and then Release the Rear Cover from the Set.

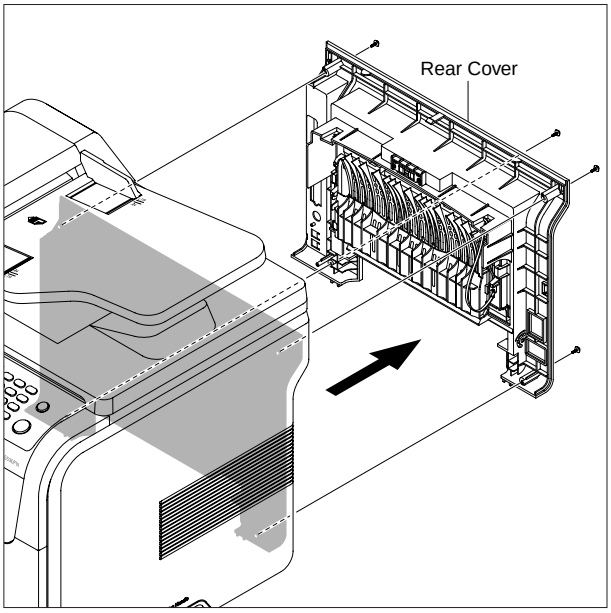

3. To remove the Face Up Cover, first release the Stopper Strap in the direction of arrow.

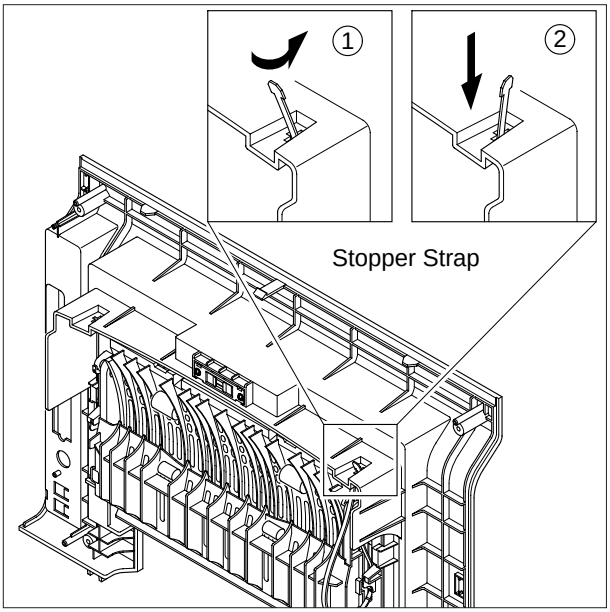

4. Unlatch the Face Up Cover from the Rear Cover and then release the Face Up Cover, as shown below.

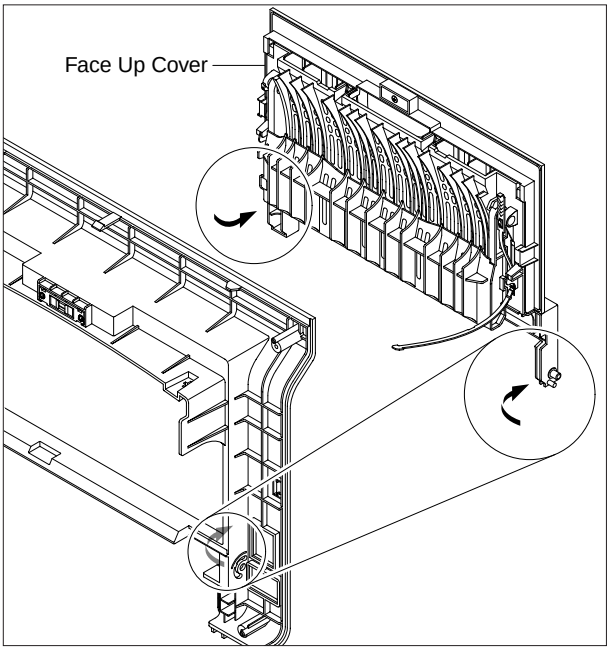

5.6 Fuser Ass'y

1. Before you remove the Fuser Ass'y, you should open the face up cover and open the guide output fuser.
   - Rear Cover (Refer to 5.5)

2. Remove the four screws securing the Fuser Ass'y and then pull the Fuser Ass'y.

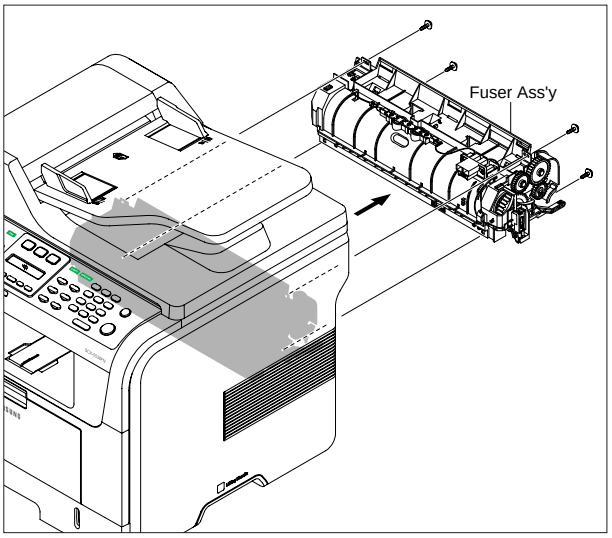

3. Release the CON Harness and REC Harness from the Thermostat and then remove the three screws securing the Thermostat and remove it.

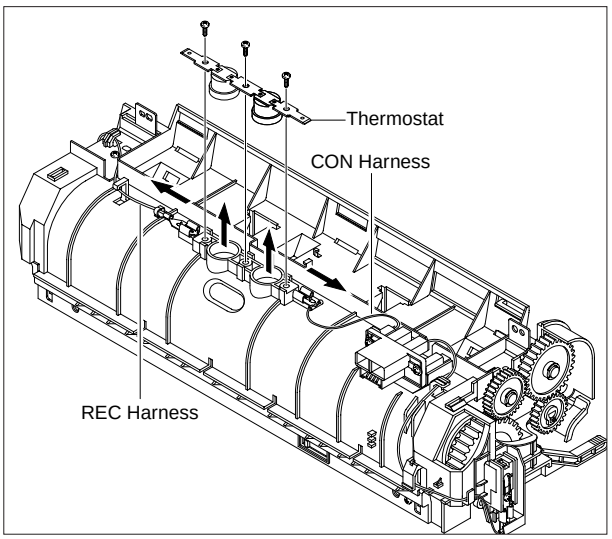

4. To remove the Electrodes, first release REC Harness from the left side of the Electrode and then release the CON Harness from the right side of the Electrode, as shown below.

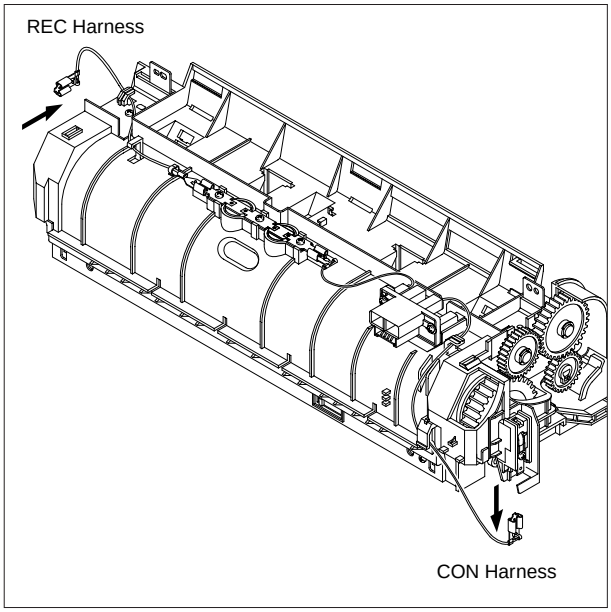

5. Remove the two screws securing the both side of the Electrode and then release the Caps and Electrodes in the direction of arrow, as shown below.

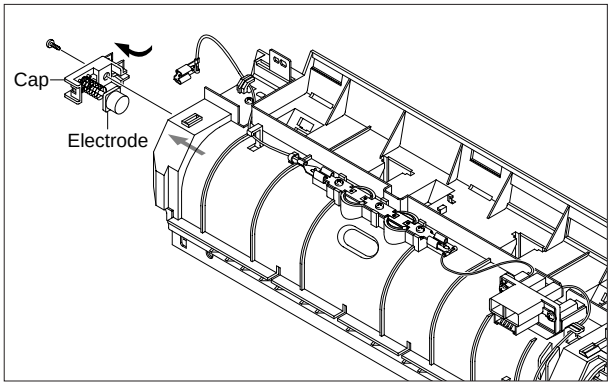

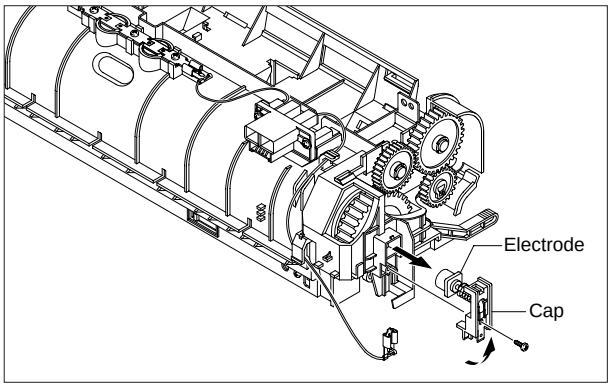

6. Remove the two screws securing the Input Guide and remove it.

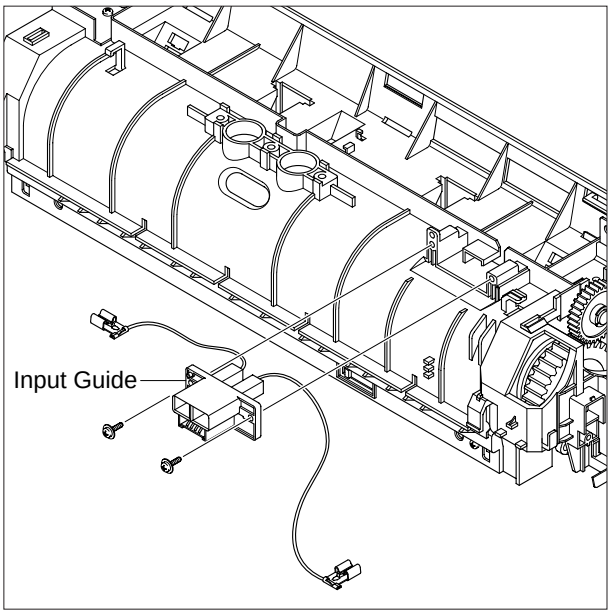

7. Unplug the connector from the Input Guide and remove the one screw securing the Thermistor and remove it.

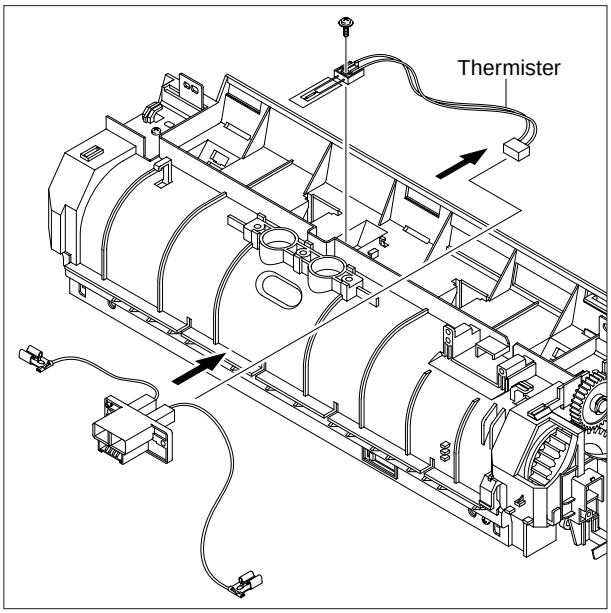

8. Remove the three screws securing the Idle Gear Bracket and remove it.

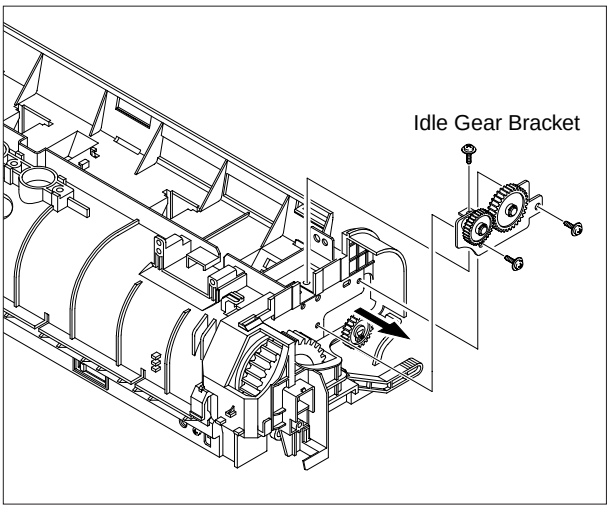

9. Remove the three screw securing the Fuser Cover and release the Fuser Cover from the Fuser Frame.

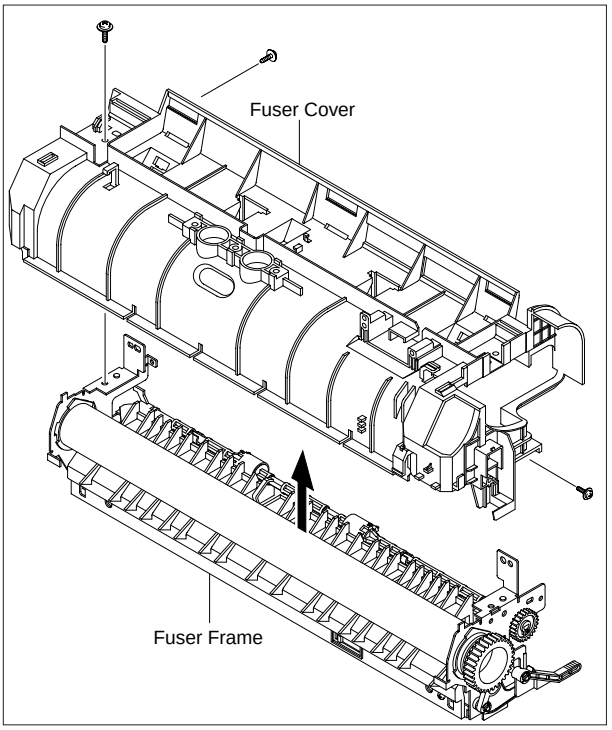

10. Release the HR Bush and then remove the Heat Roller, as shown below.

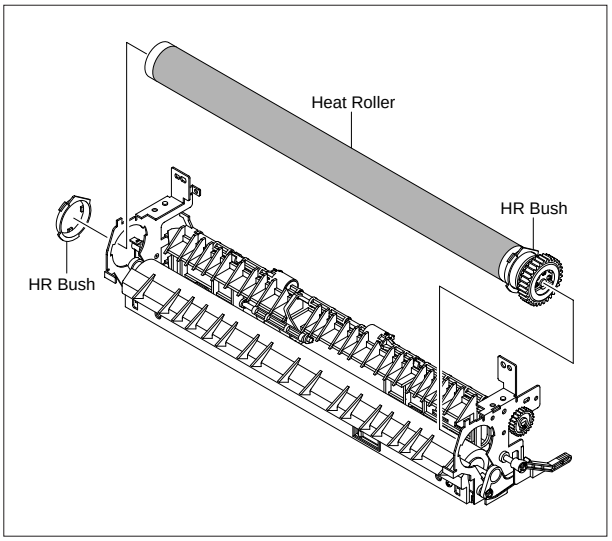

Notice: Be careful not to damage or contaminate the surface of the roller when assembling and dis assembling the Heat Roller.

11. To remove the Guide Input, first unlatch the Hook and then release the Guide Input in the direction of arrow, as shown below.

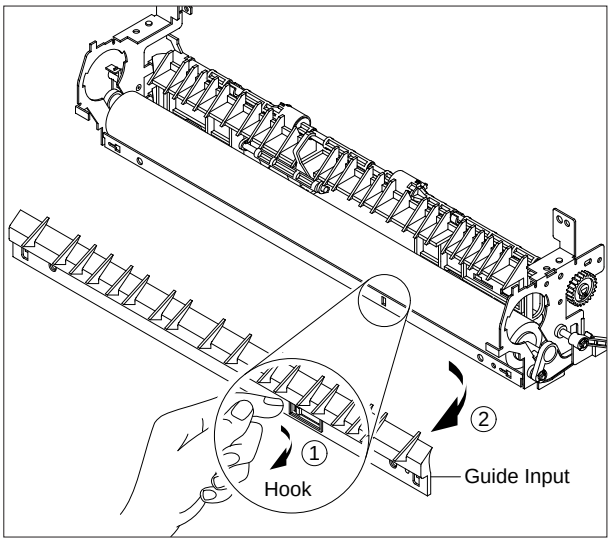

Notice : You must remove the Guide Input before removing the Jam Holder so that you won't damaged Pressure Roller.

12. Remove the Jam Link Lever (L,R) and Jam Holder (L,R) and then remove the Pressure Roller, as shown below.

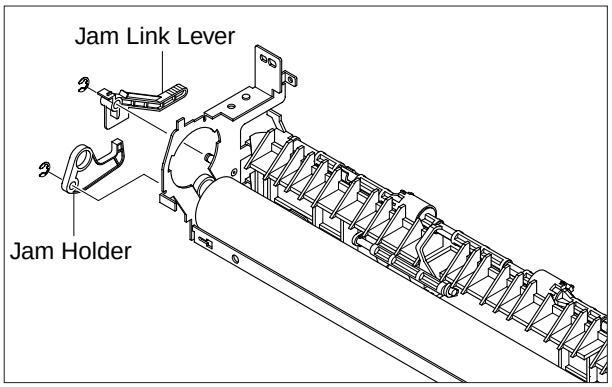

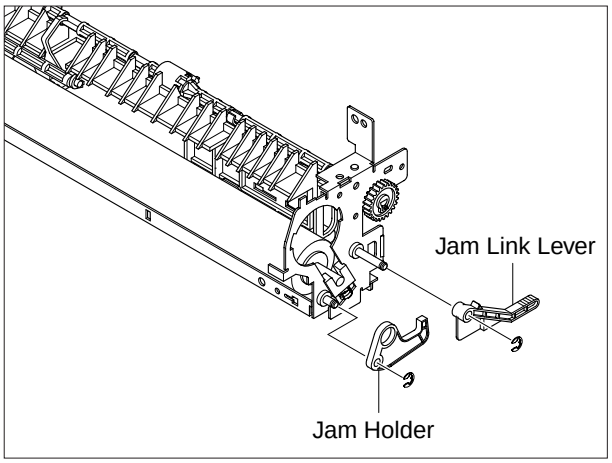

5.7 Side Cover (Left, Right)

1. Before you remove the Side Cover (Left, Right), you should remove:
   - Front Cover (Refer to 5.3)
   - Rear Cover (Refer to 5.5)

2. Remove the two screws securing the Right Side Cover, as shown below.

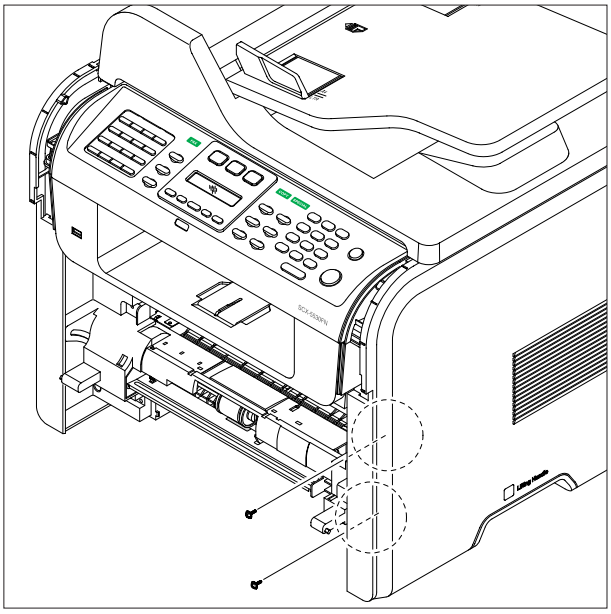

3. Apply light pressure to the bottom of the Right Side Cover and pull it to the right side in the direction of arrows, as shown below.

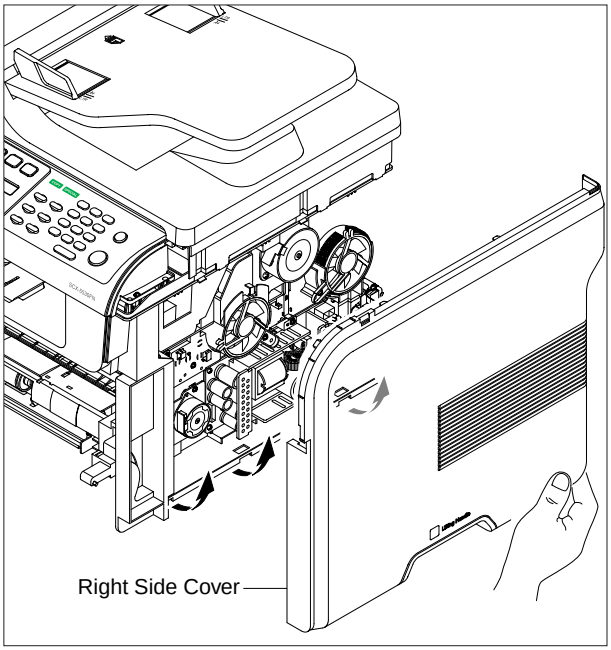

4. Remove the two screws securing the Left Side Cover, as shown below.

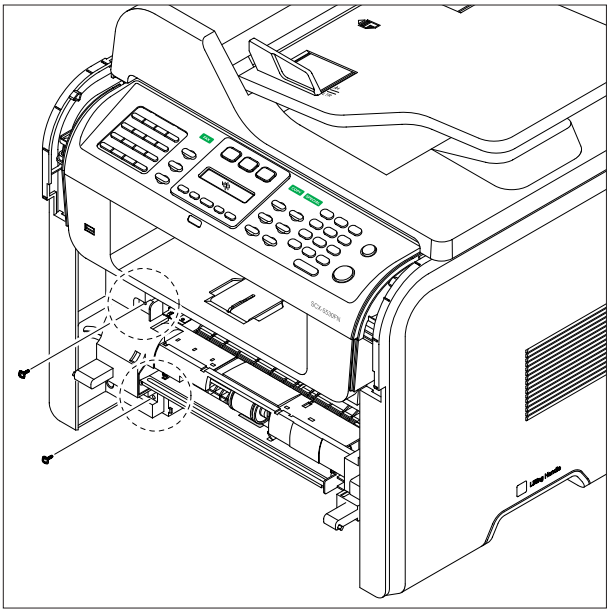

5. Apply light pressure to the bottom of the Left Side Cover and pull it to the left side in the direction of arrows, as shown below.

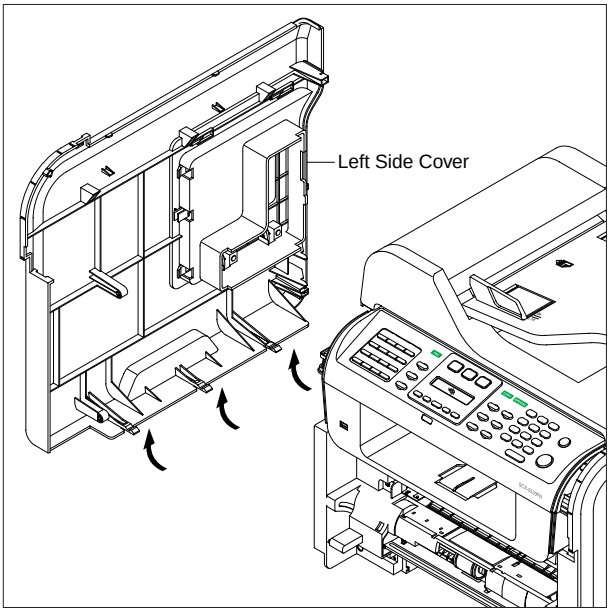

6. To remove the DIMM Cover, first open the DIMM Cover in the direction of arrow and then release the DIMM Cover, as shown below.

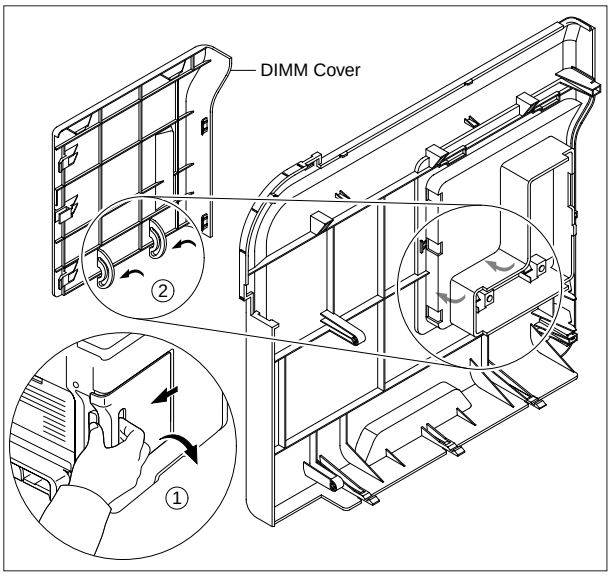

5.8 OPE Unit

1. Before you remove the OPE Unit, you should remove:
   - Cover Upper L, R (Refer to 5.2)

2. Remove the two screws securing the OPE Unit to the Platen Ass'y.

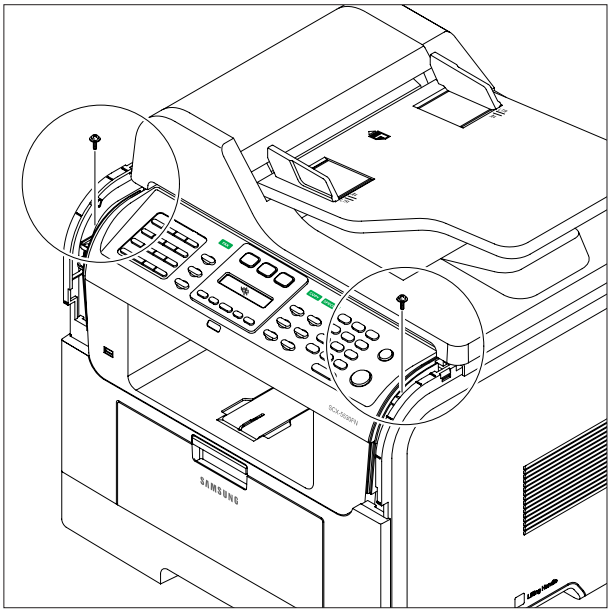

3. Apply light pressure to the front of the OPE Unit and pull it in the direction of arrow, as shown below.

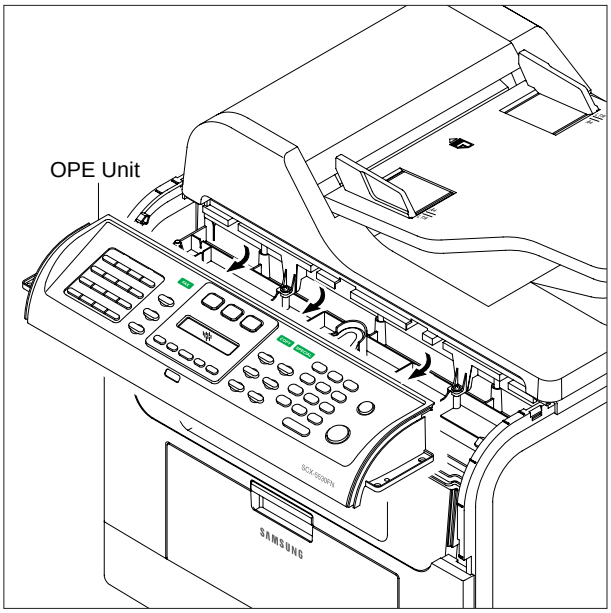

4. Unplug the three connectors from the OPE PBA, as shown below.

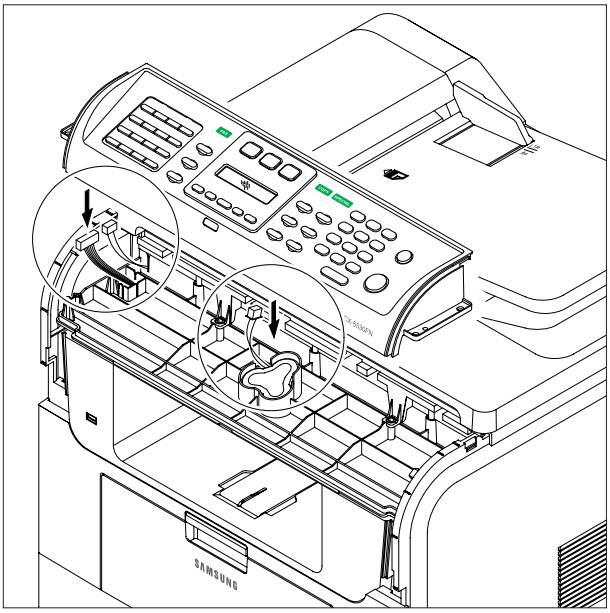

5. Remove the nine screws securing the OPE PBA to the OPE Cover.

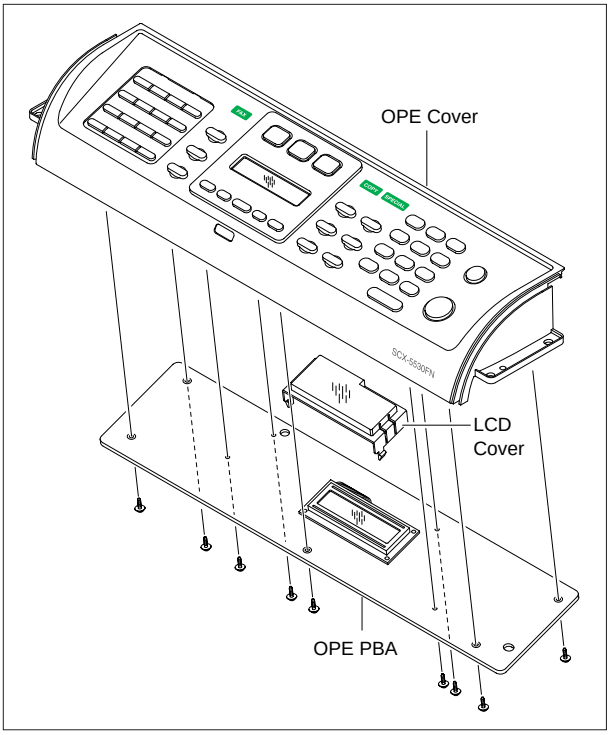

6. Remove the Contact Rubbers from the OPE Cover.

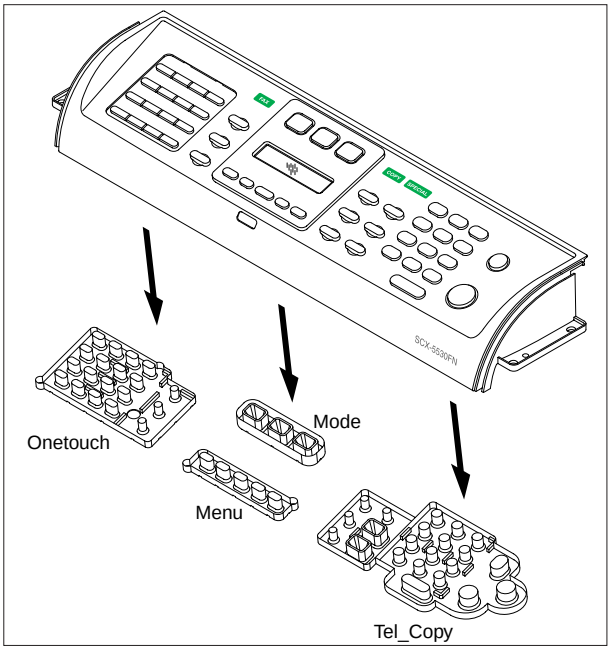

7. Remove the Lens and Keys from the OPE Cover.

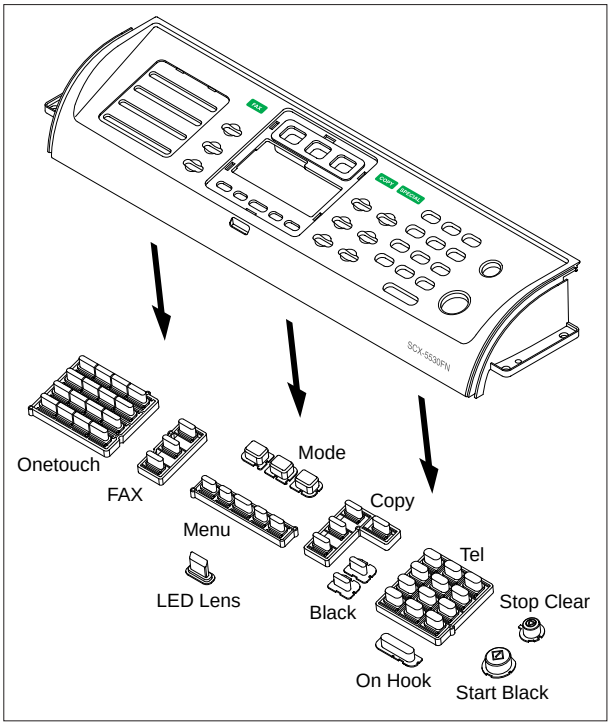

8. If necessary, remove the NEVI Cover.

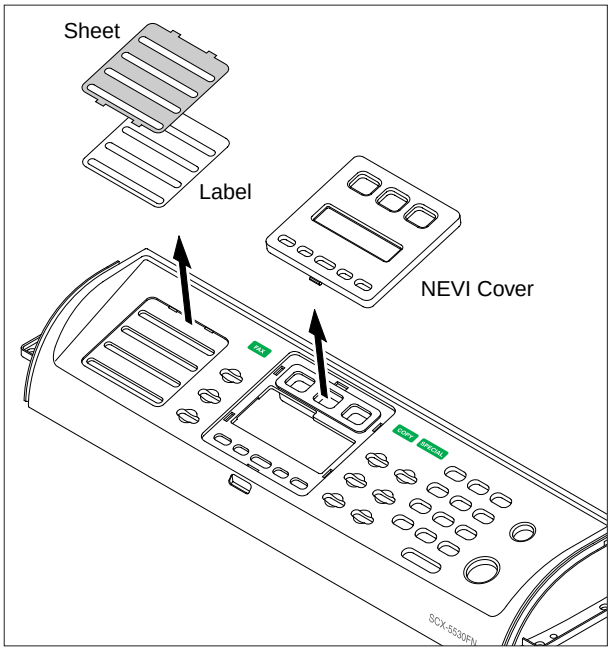

9. For easy disassembly, release the Battery-NIH.

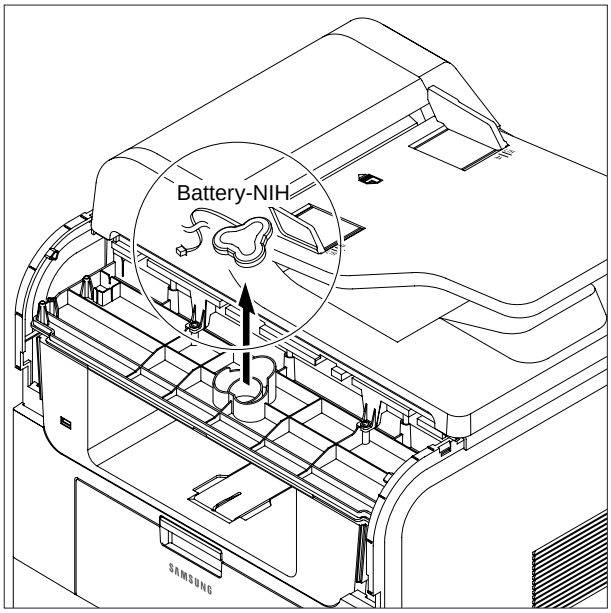

5.9 ADF Ass'y

1. Open the ADF Ass'y

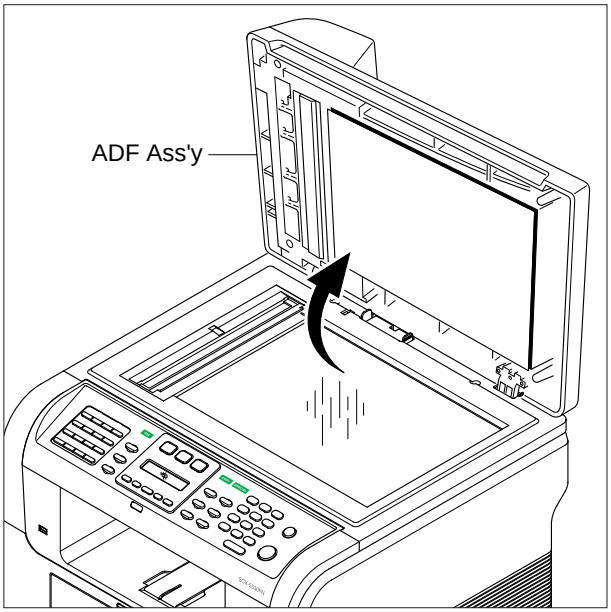

2. First remove the ADF Harness from the Platen Ass'y and then pull the ADF Ass'y upward in the direction of arrow, as shown below.

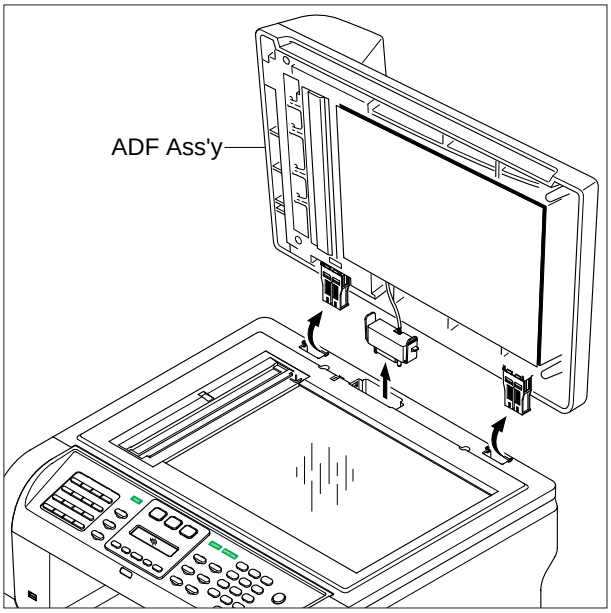

3. To remove the ADF Engine part, first remove the seven screws securing the ADF Engine part to the Cover Platen and then release the ADF Engine part in the direction of arrow, as shown below.

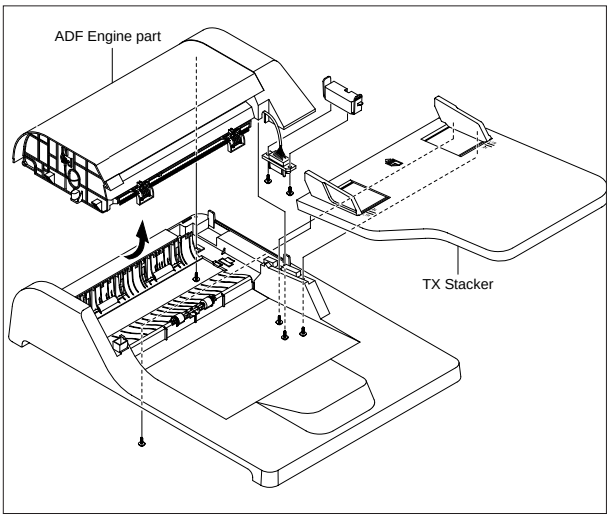

Notice : Take care to thread the ADF Harness through the Cover Platen.

4. Remove the Open Cover, as shown below.

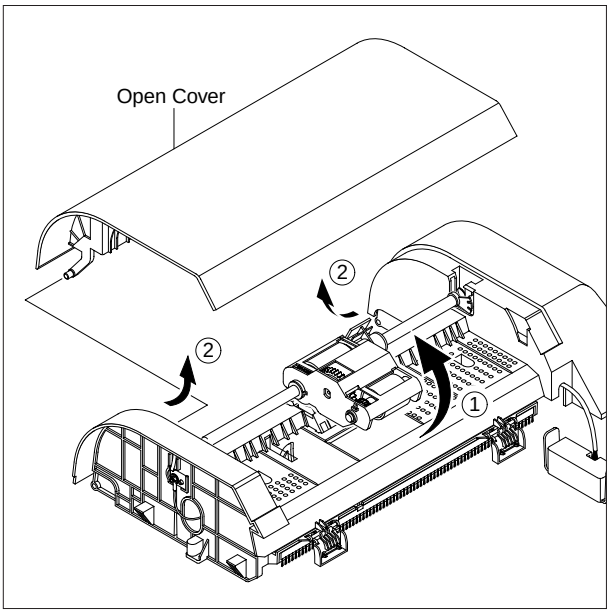

Notice : When working on the ADF Motor Ass'y take care not to contaminate any of the rubber surfaces with grease.

5. Release the Bush and rotate it until it reaches the slot, as shown below. Then lift the Pick Up Ass'y out.

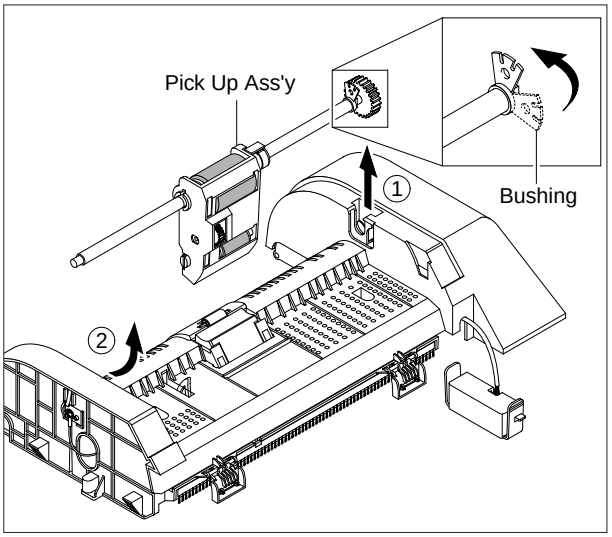

6. Remove the two screws securing the ADF Upper and remove it, as shown below.

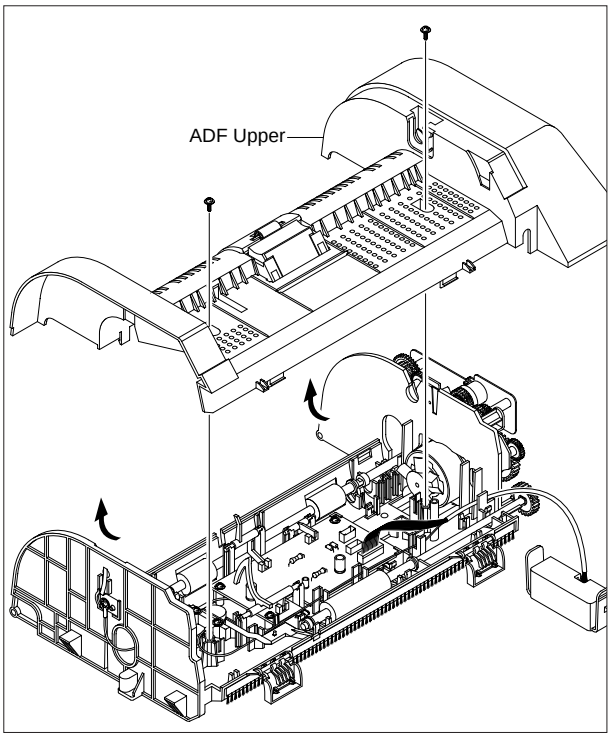

Notice : Before removing the ADF Engine part take great care to note the position of the Ferrite Core and the Motor Harness routing. When refitting the ADF Engine part ensure that the Harness and Ferrite are properly located and are clear of the Motor Fan and White Bar Clip.

7. Unplug the two connector and remove four screws securing the ADF Motor Ass'y and then remove the receptacle of the Ground Cable, as shown below. Then take out the ADF Motor Ass'y.

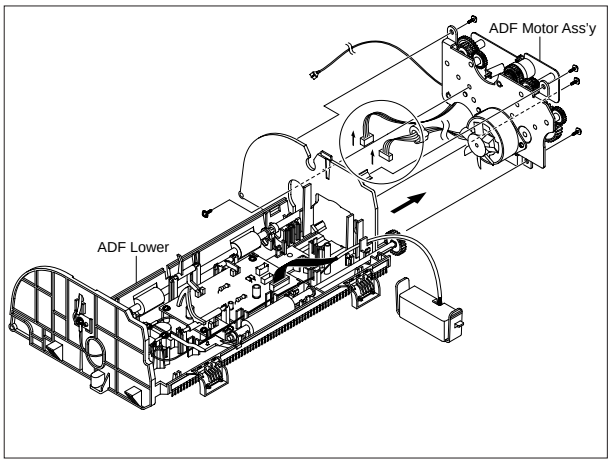

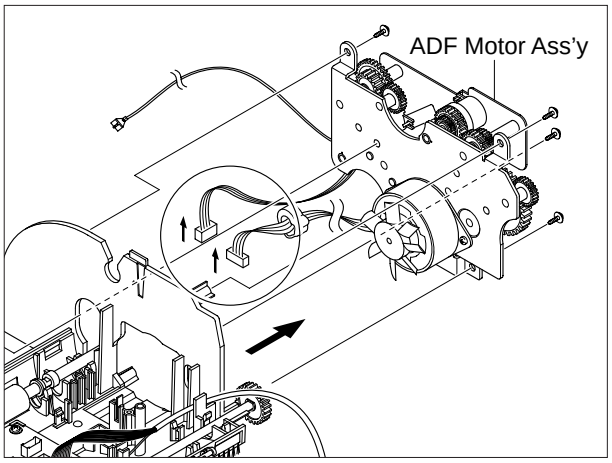

5.10 Platen Ass'y

1. Before you remove the Platen Ass'y, you should remove:
   - Side Cover Left, Right (Refer to 5.7)
   - OPE Unit (Refer to 5.8)
   - ADF Ass'y (Refer to 5.9)

2. Remove the two screws securing the Platen Ass'y, as shown below.

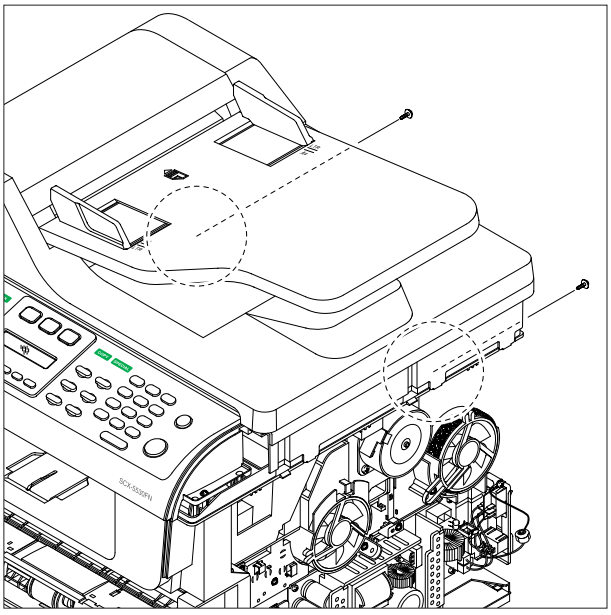

3. Remove the one screw securing the Ground Cable and unplug the four connectors and CCD Cable.

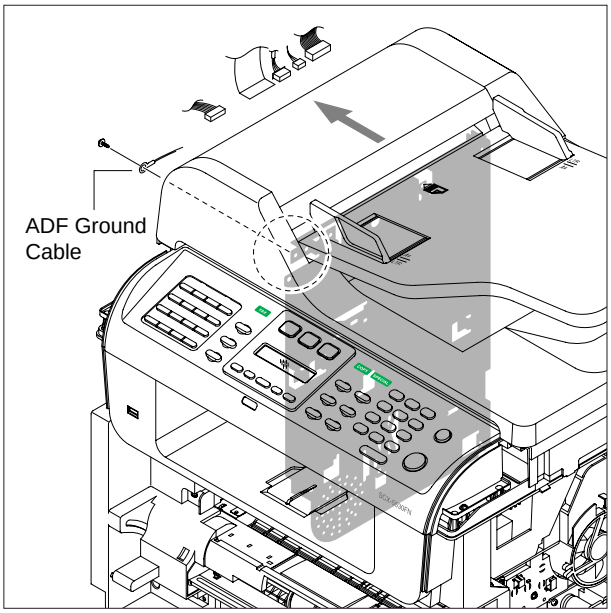

4. Lift the Platen Ass'y in the direction of arrow, as shown below.

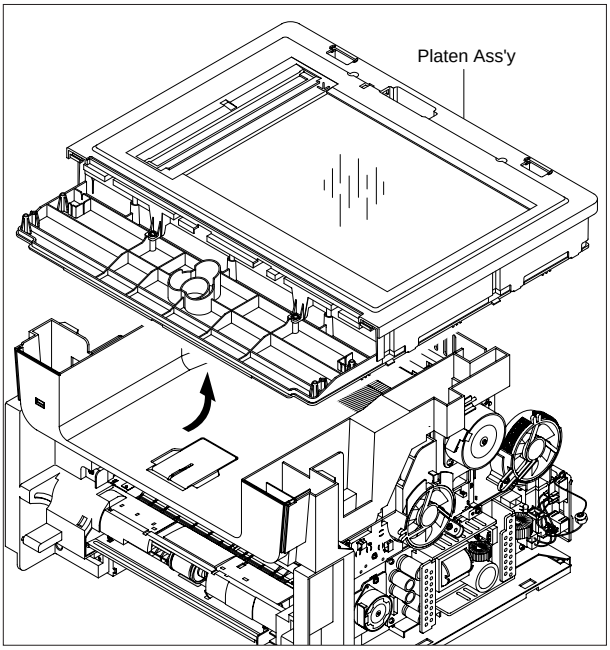

5. Remove the four screws securing the Scan Upper.

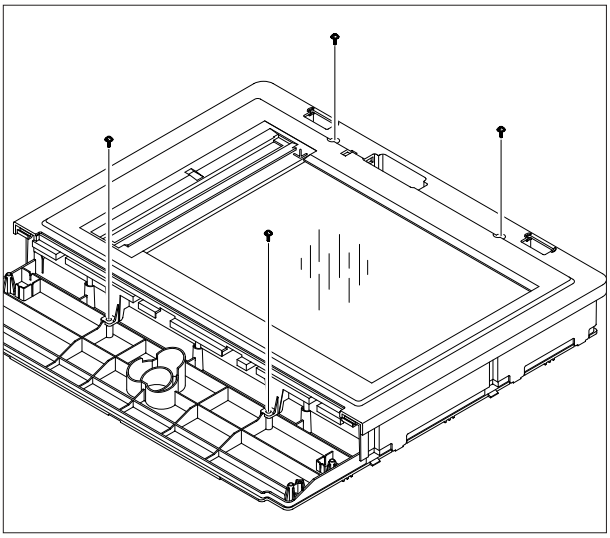

6. Release the six hooks securing the Scan Upper to the Scan Lower and remove it, as shown below.

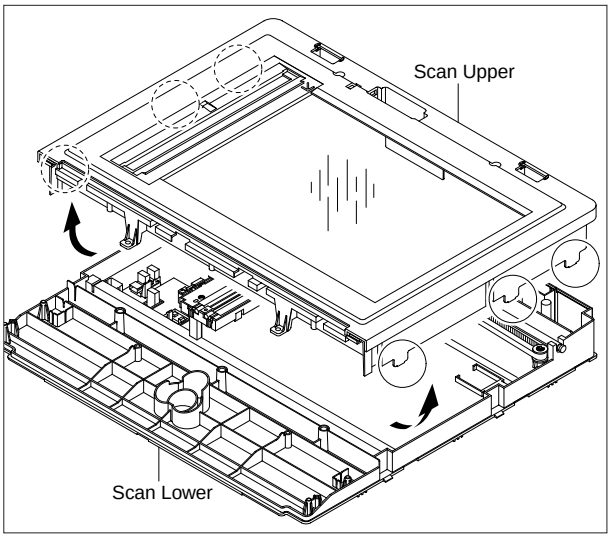

7. Remove the CCD Cable, as shown below.

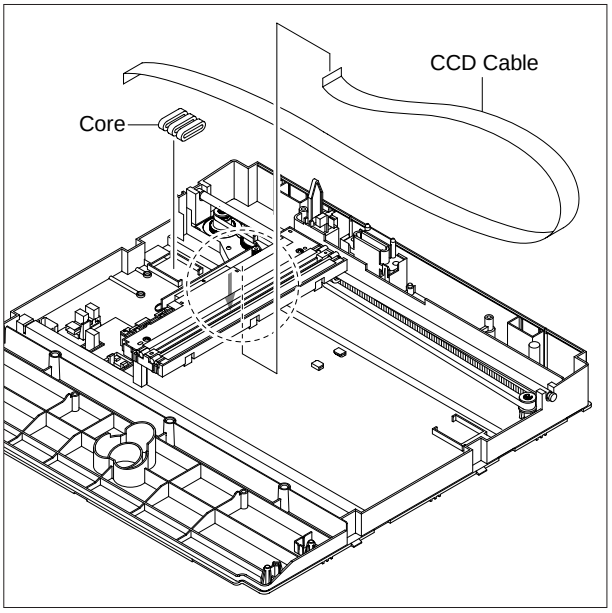

Notice: You should connector remove the CCD Cable vertically to avoid the CCD Cable pin damage.

8. Pull up the CCD Shaft and take out the CCDM.

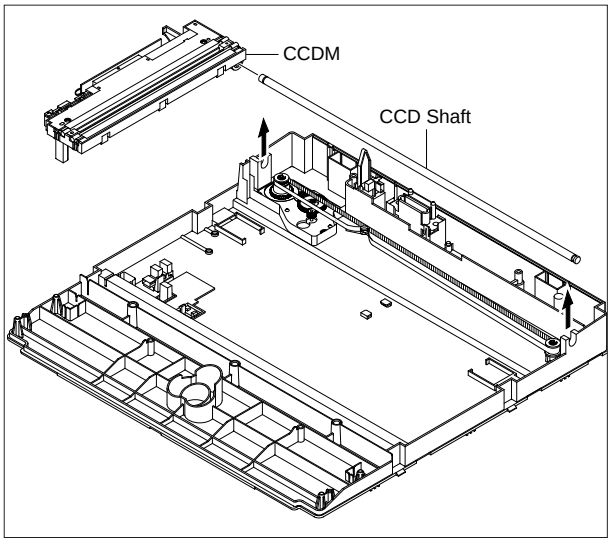

9. Squeeze the spring to release the tension in the Belt and lift from the pulleys, as shown below.

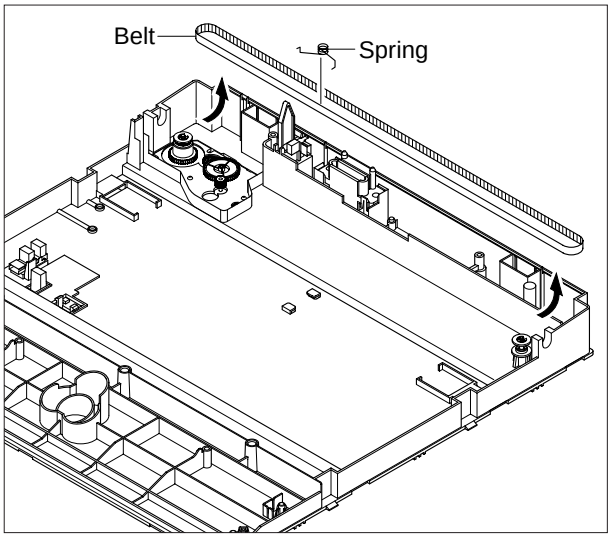

10. Remove the three screws securing the Scan Motor Ass'y and remove it.

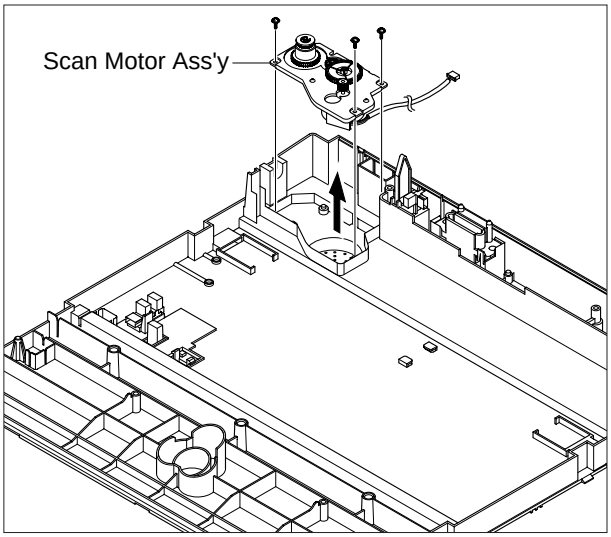

11. If necessary, remove the two screws securing the Scan Motor and remove it, as shown below.

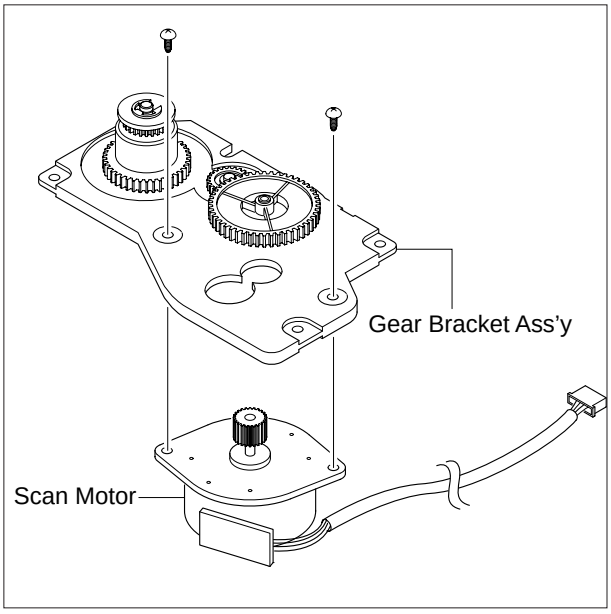

12. To remove the ADF Lower Harness, first unlatch the Hooks in the direction of arrow and then carefully release the ADF Lower Harness from the Scan Lower, as shown below.

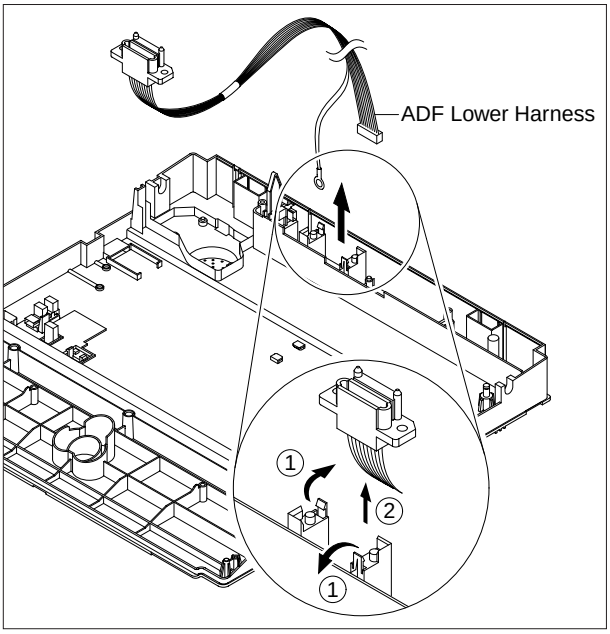

13. Unplug the connector from the Open Sensor Ass'y.

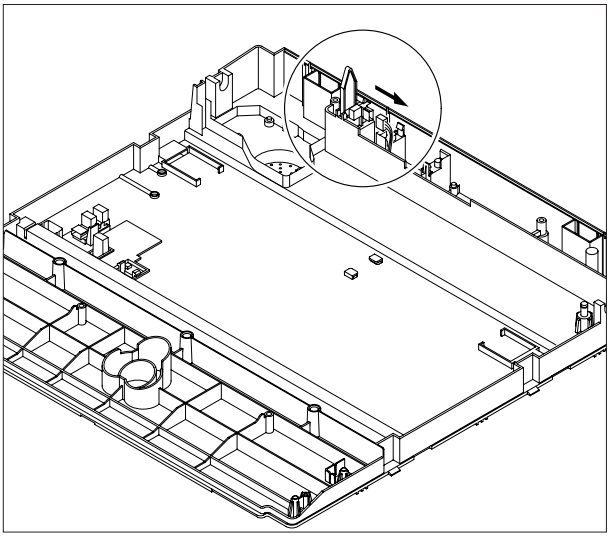

14. Unlatch the Open Sensor and remove it, as shown below.

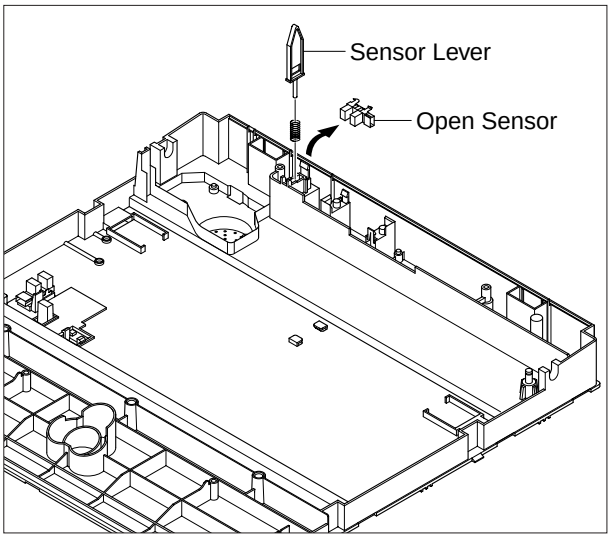

15. Remove the CCD Holder.

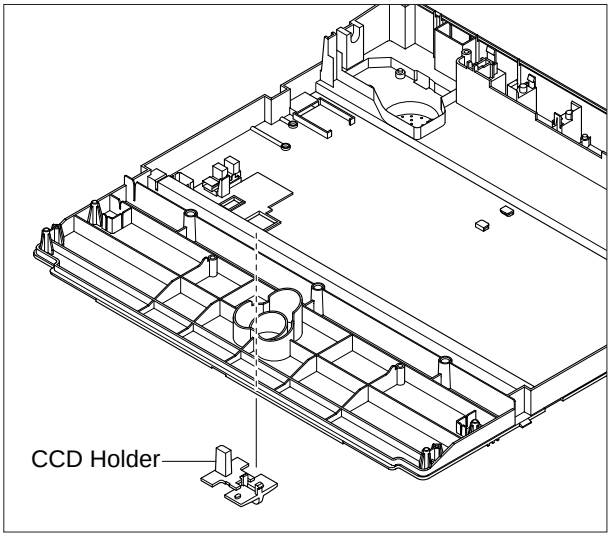

16. Unplug the Harness from the CCD Home Sensor and release the CCD Home Sensor, as shown below.

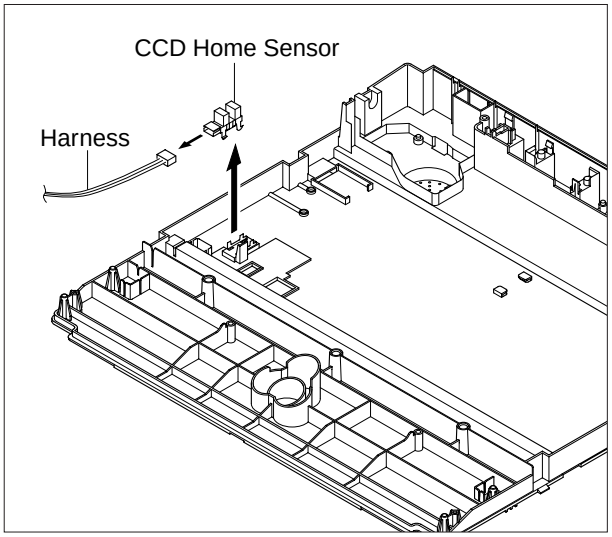

Caution : Reassembling CCDM

1) When refitting the Scanner Belt and Belt Spring take care to relocate the tension spring as close to the right side of the CCDM as is possible, as shown below.

2) When refitting the Scan Upper Cover take care to ensure that the Cover Open Switch is not trapped.

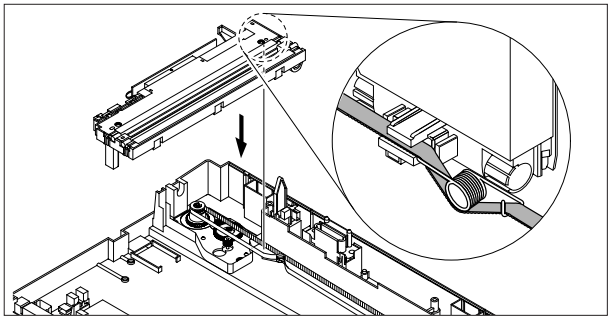

5.11 Shield Controller Ass'y

1. Before you remove the Shield Controller Ass'y, you should remove:
   - Side Cover Left (Refer to 5.7.4)

2. Unplug the all connectors and remove the one screw securing the Ground Cable.

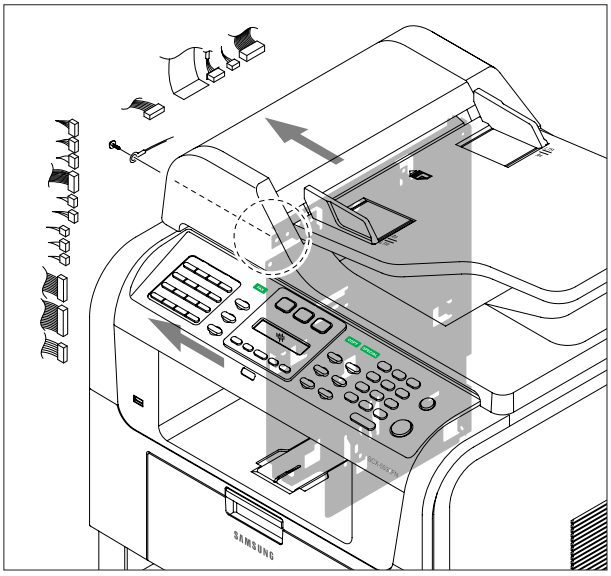

3. Remove the five screws securing the Shield Controller Ass'y and remove it.

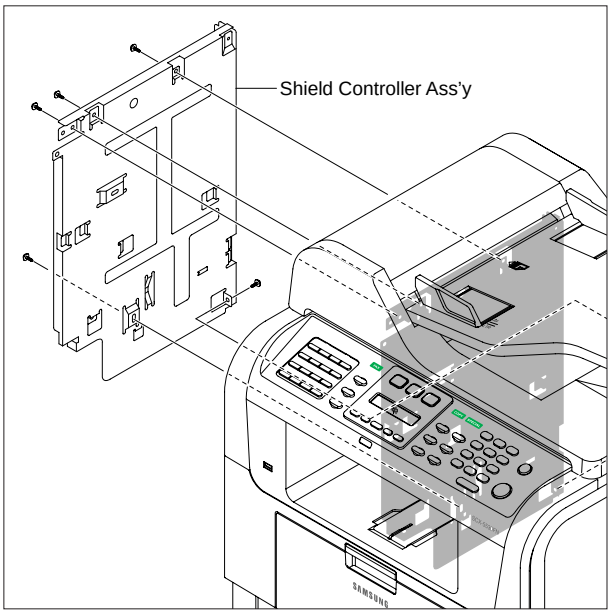

4. Remove the five screws securing the Main PBA to the Shield and unplug the Film Cable and then remove the Main PBA.

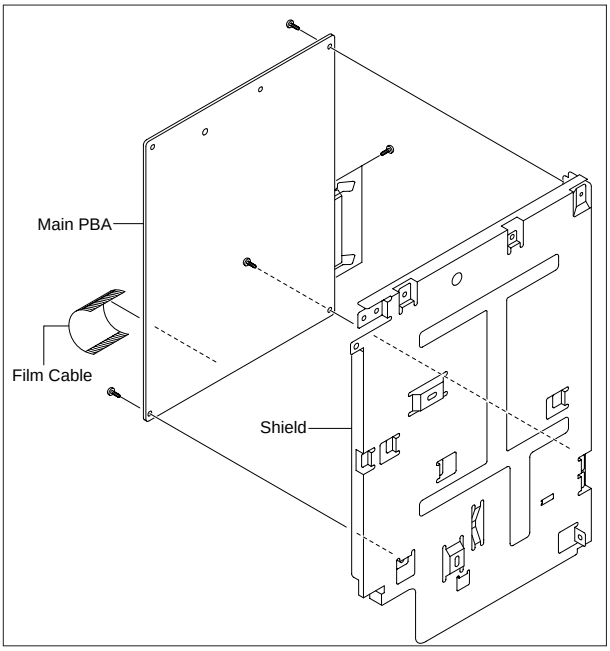

5. The connectors are located, as shown below.

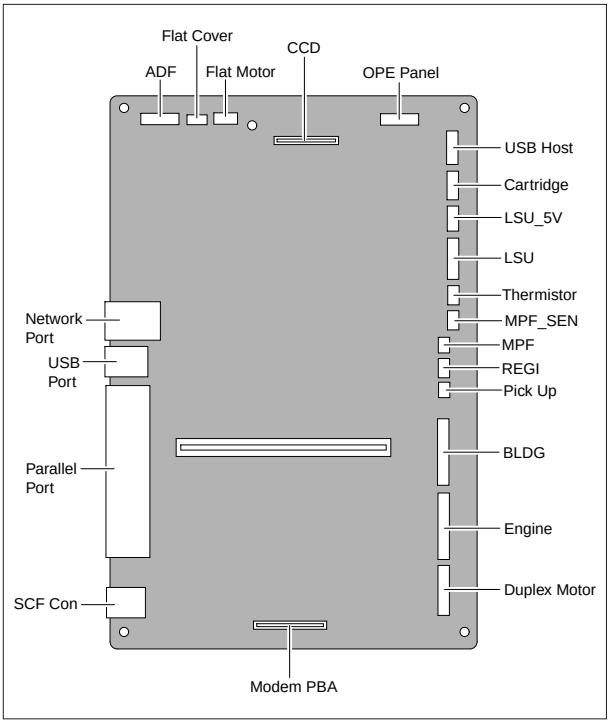

6. Remove the three screws securing the Modem PBA to the Shield and unplug the Film Cable and then remove the Modem PBA.

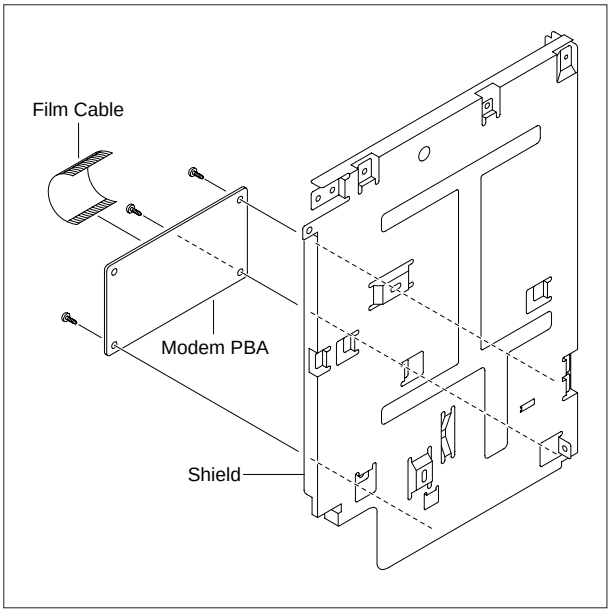

7. Remove the two screws securing the Speaker to the Shield and unplug the connector from the Modem PBA and then remove the Speaker.

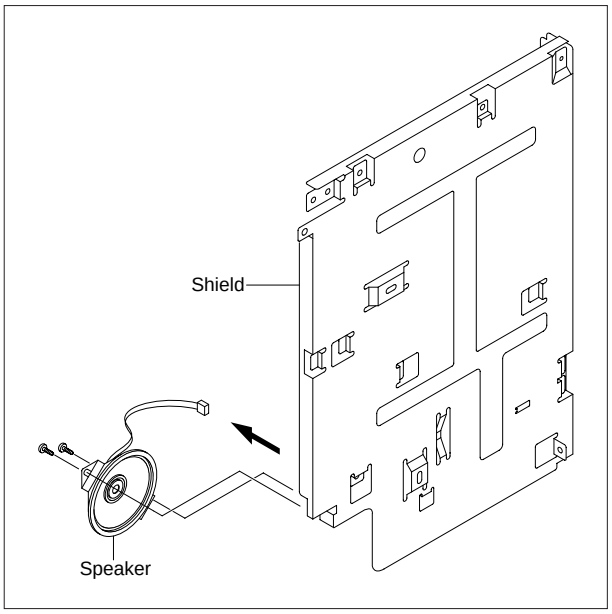

5.12 Drive Ass'y

1. Before you remove the Drive Ass'y, you should remove:
   - Side Cover Left (Refer to 5.7.4)
   - Shield Controller Ass'y (Refer to 5.11)

2. Remove the five screws securing the Drive Ass'y and remove it.

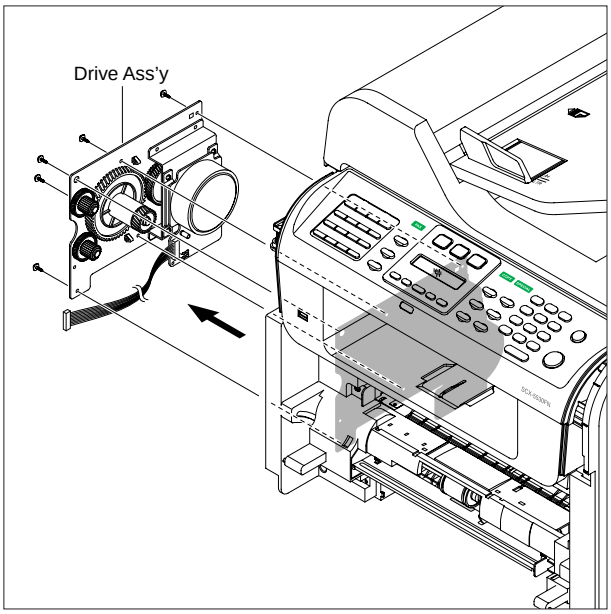

Notice : The six screws have numbers stamped into the Drive Ass'y base plate. When refitting the Drive Ass'y tighten the screws the order they are numbered. Only screws numbered 1 to 5 are fitted at this stage. Screw 6 is fitted when the Shield Controller Ass'y is refitted.

3. If necessary, remove the four screws securing the BLDC Motor Ass'y and remove it.

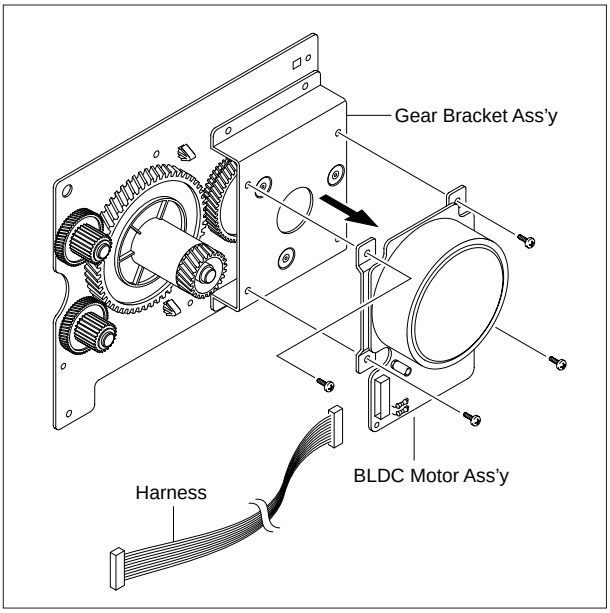

5.13 Duplex Drive Ass'y

1. Before you remove the Duplex Drive Ass'y, you should remove:
   - Side Cover Right (Refer to 5.7.3)

2. Unplug the connector from the Connection PCB and remove the three screws securing the Duplex Drive Unit and remove it.

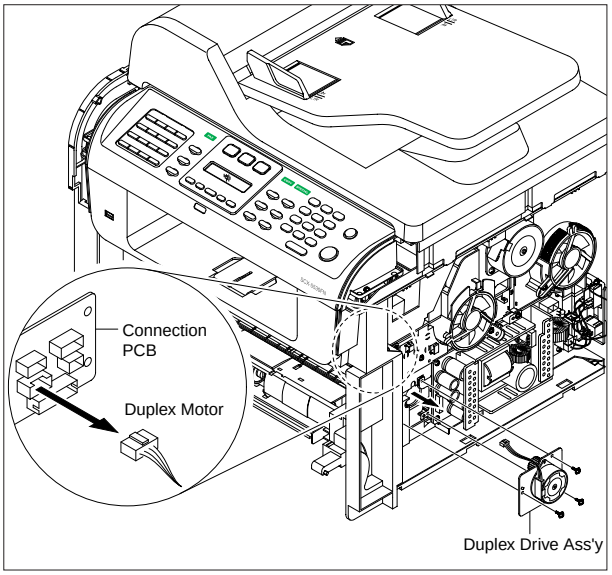

3. If necessary, remove the two screws securing the Duplex Motor and remove it.

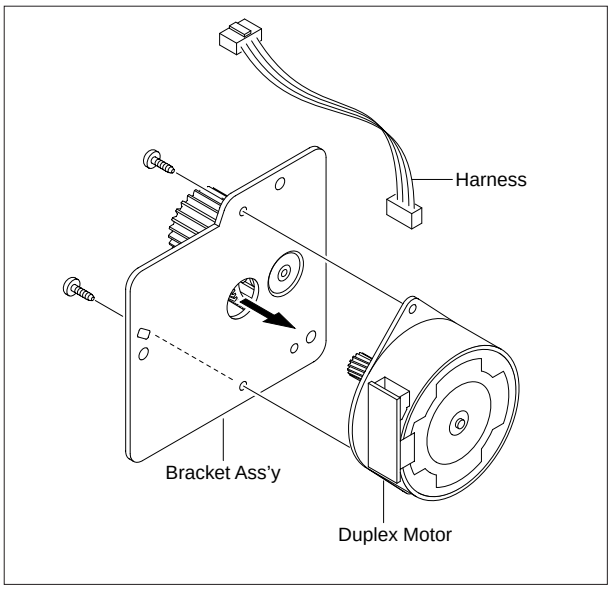

5.14 Shield SMPS Ass'y

1. Before you remove the Shield SMPS Ass'y, you should remove:
   - Side Cover Right (Refer to 5.7.3)
   - Duplex Drive Ass'y (Refer to 5.13)

2. Unplug the two connectors (HVPS, Fuser).

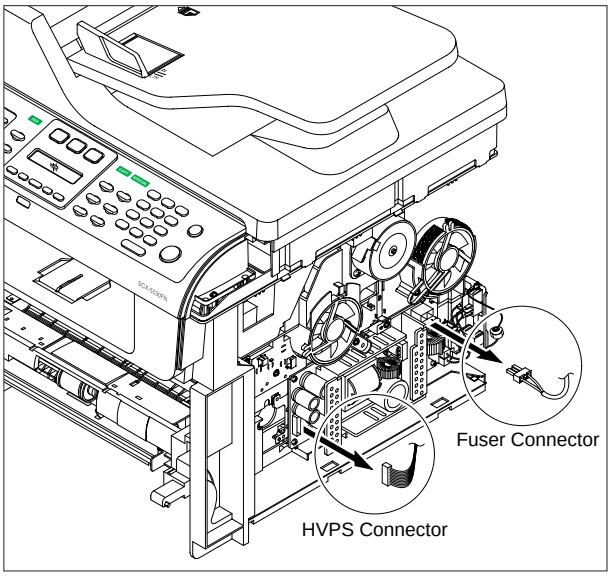

3. Remove the three screws securing the Shield SMPS Ass'y and remove it.

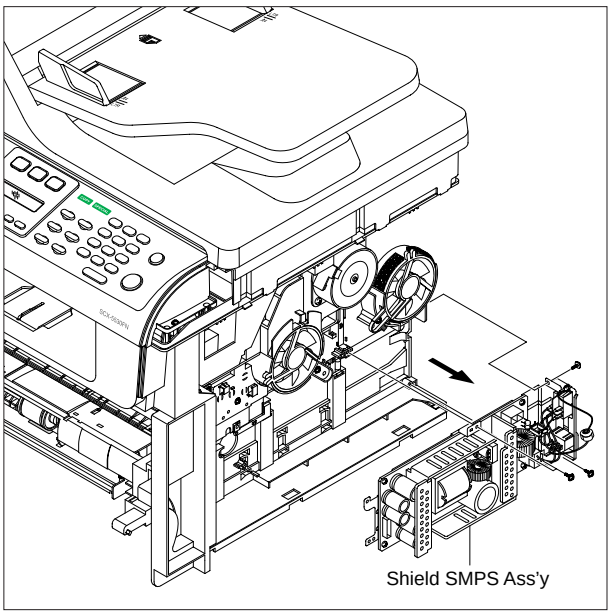

4. Unplug the connector (AC Inlet) and remove the four screws securing SMPS and remove it.

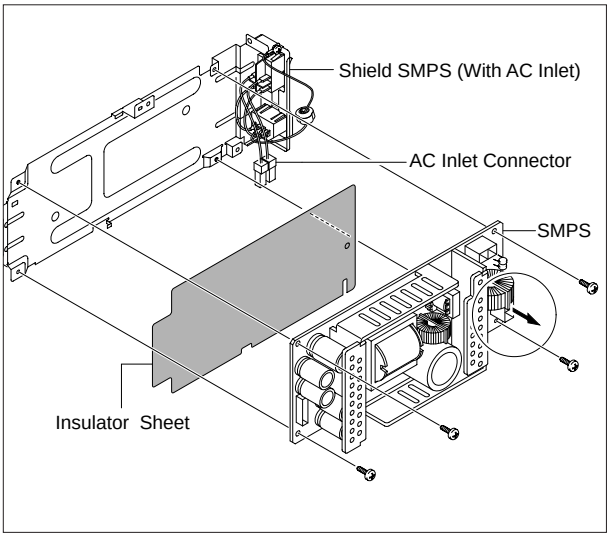

5.15 Connection PCB

1. Before you remove the Connection PCB, you should remove:
   - Side Cover Right (Refer to 5.7.3)

2. Unplug the all connectors.

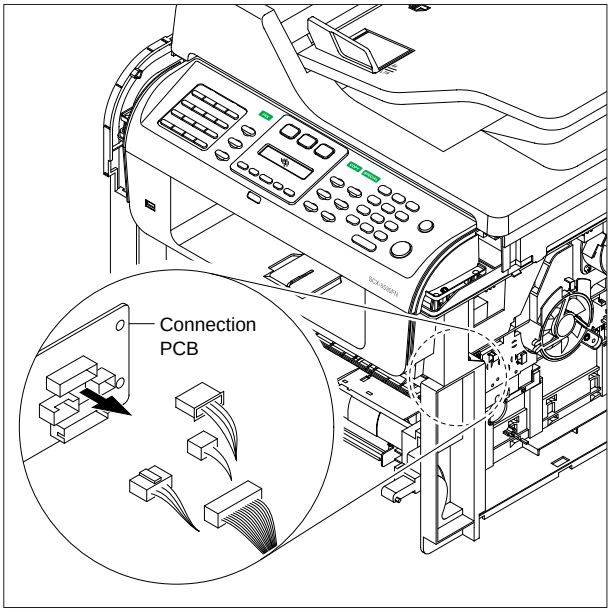

3. Remove the two screws securing the Connection PCB and remove it.

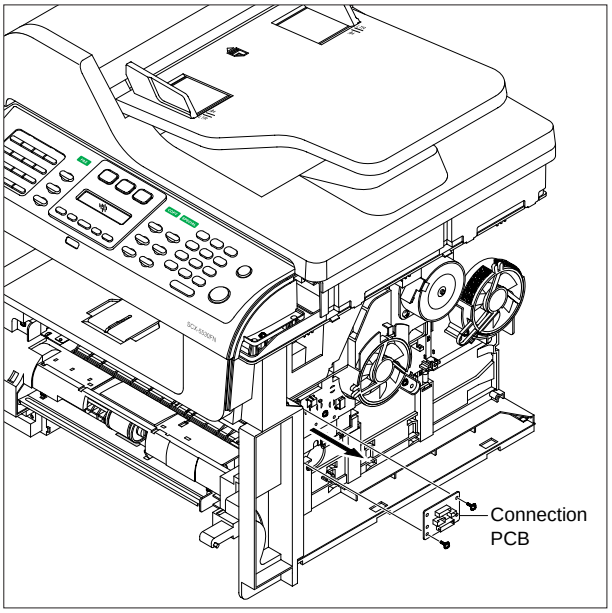

4. The connectors are located, as shown below.

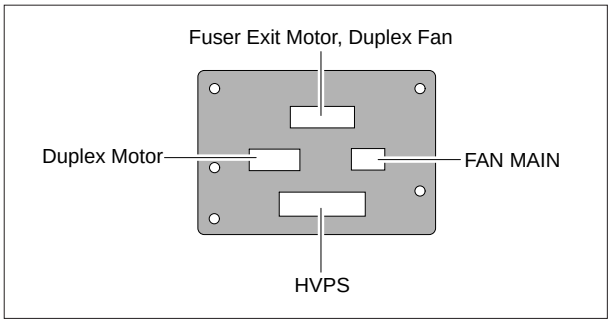

5.16 Fuser Drive Ass'y

1. Before you remove the Fuser Drive Ass'y, you should remove:
   - Side Cover Right (Refer to 5.7.3)

2. Unplug the connector from the Connection PCB.

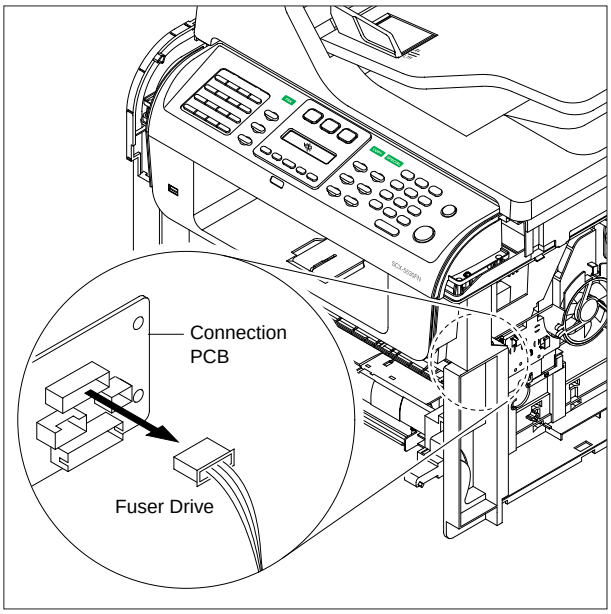

3. Remove the three screws securing the Fuser Drive Ass'y and remove it.

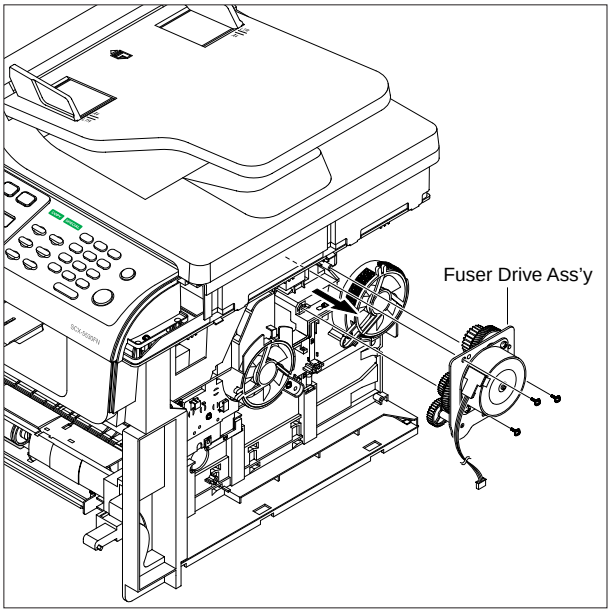

4. If necnsary, remove the two screws securing the Step Motor and remove it.

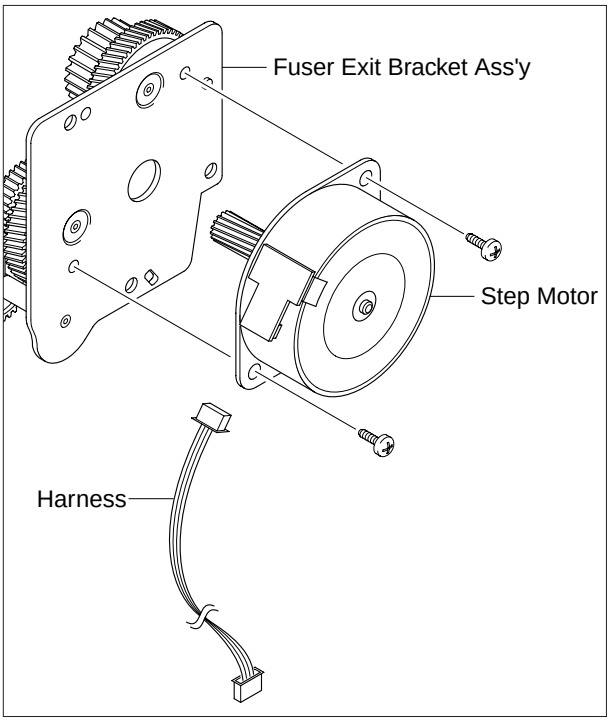

5.17 Fan

1. Before you remove the Fan, you should remove:
   - Side Cover Right (Refer to 5.7.3)

2. Unplug the two connectors from the Connection PCB, as shown below.

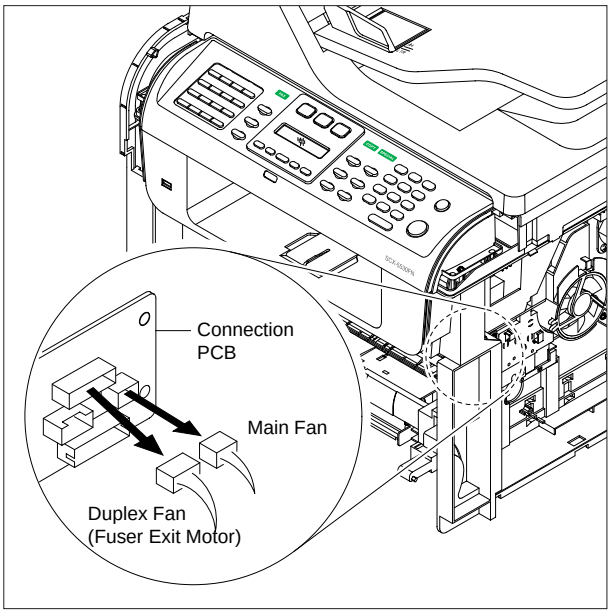

3. Remove the two screws securing the Fans and then pull the Fans (Main, Duplex).

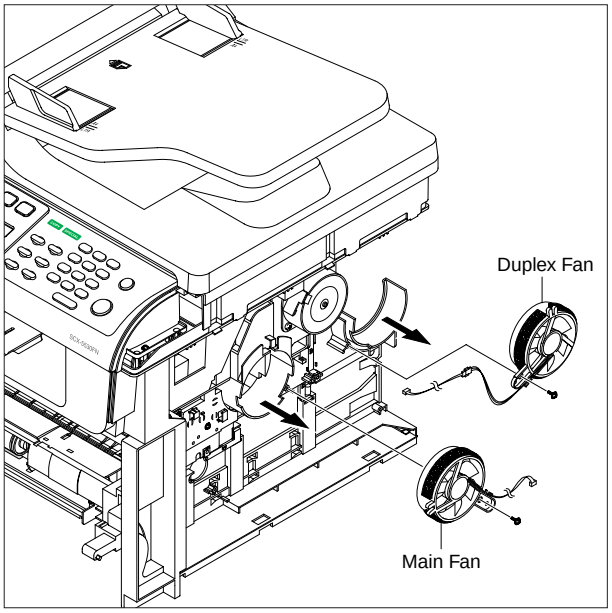

5.18 Pick Up Roller Ass'y

1. Take out the Cassette.

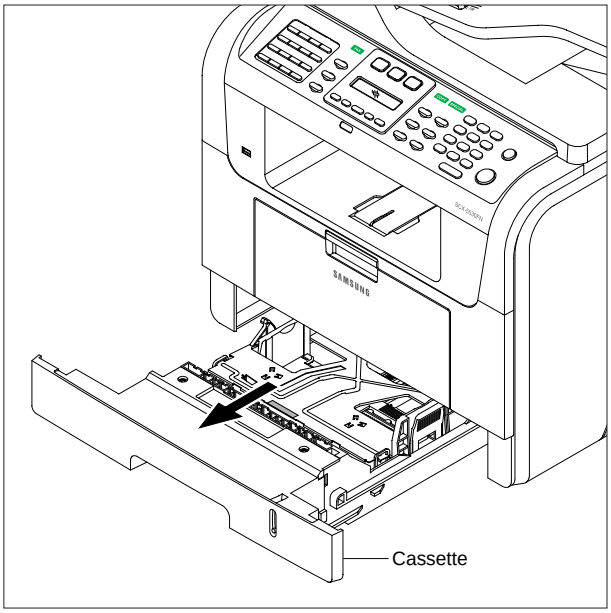

2. To remove the Pick Up Roller Ass'y, first lift the notch attached to the Pick Up Roller Ass'y from the Shaft, then slide the Pick Up Roller Ass'y from left to right and it will be released completely, as shown below.

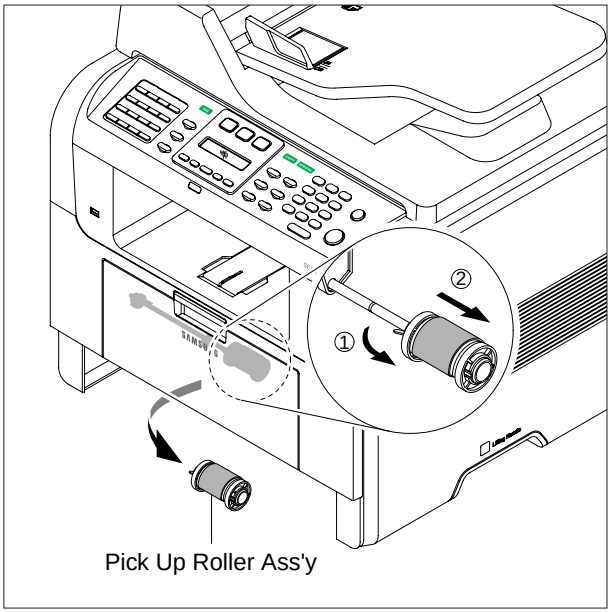

3. To remove the Shaft, first release the locker and slide the Shaft from left to right, then lift the notch attached to the Cam so that it's released from the Shaft. Then release the Bush from the Shaft and remove the Shaft from the Duplex Guide Housing, as shown below.

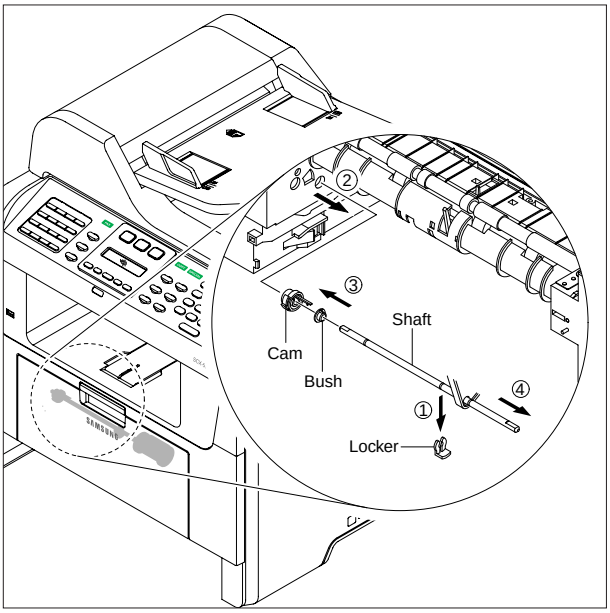

5.19 Duplex Guide Housing (With Feed Roller)

1. Before you remove the Duplex Guide Housing, you should remove:
   - Pick Up Roller Ass'y (Refer to 5.18)

2. Remove the two screws securing the Duplex Guide Housing.

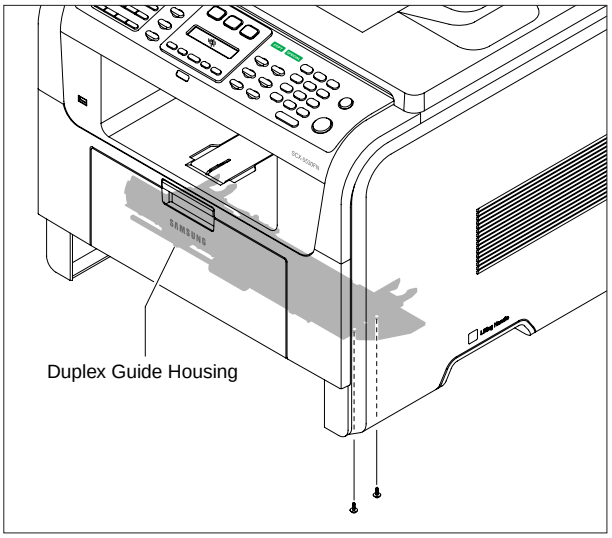

3. Unplug the one connector (Photo Interrupter) and remove the Duplex Guide Housing (with Feed Roller), as shown below.

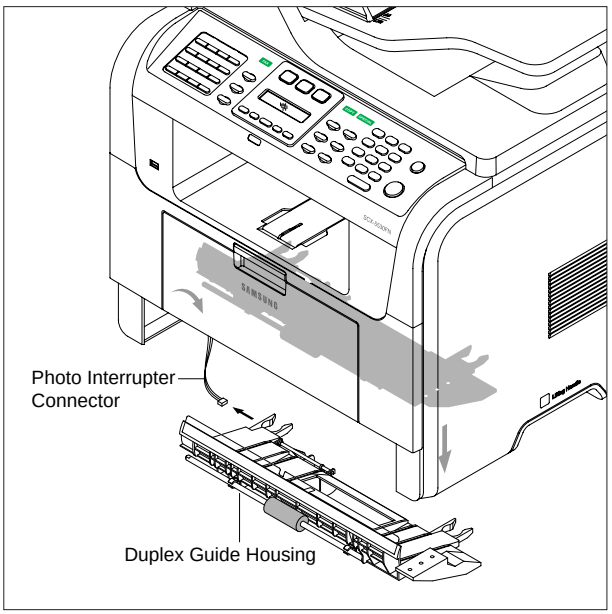

4. Pull the Feed Roller from the Bushing.

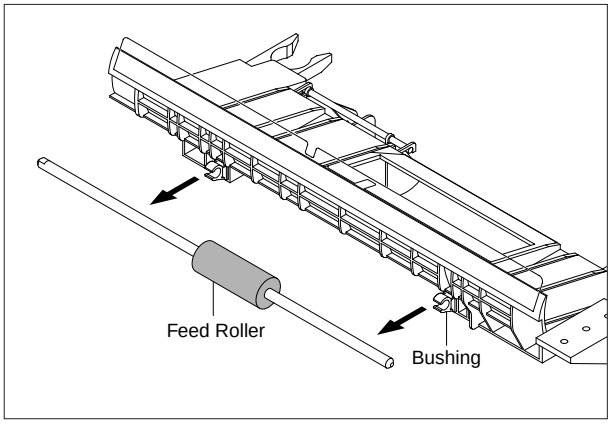

5.20 HVPS Housing

1. Before you remove the HVPS Housing, you should remove:
   - Duplex Drive Ass'y (Refer to 5.13)
   - Unplug the HVPS Connector (Refer to 5.14)
   - Pick Up Roller Ass'y (Refer to 5.18)
   - Duplex Guide Housing (Refer to 5.19)

2. Remove the eight screws securing the HVPS Housing, as shown below.

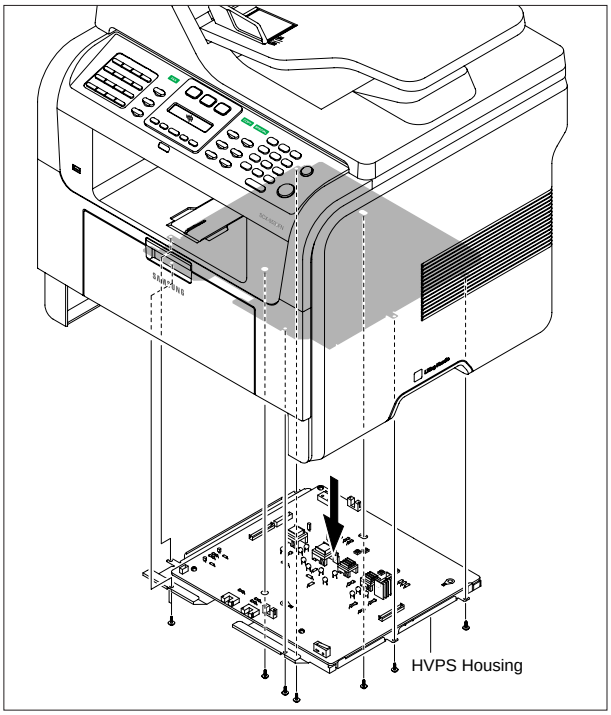

3. Unplug the connector for connector PBA and SMPS first. Unplug the other Connections.

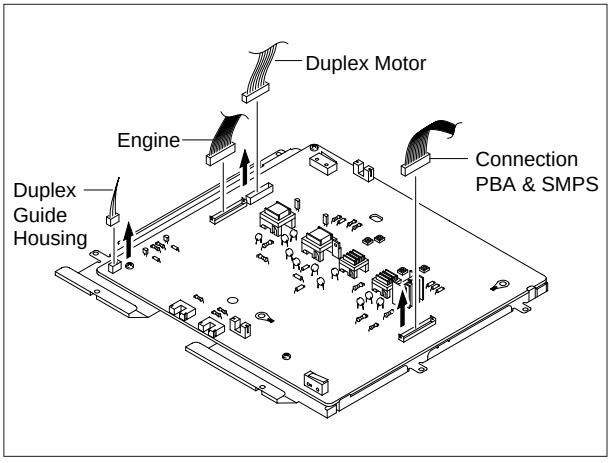

4. If necessary, remove the three screws securing the HVPS and remove it.

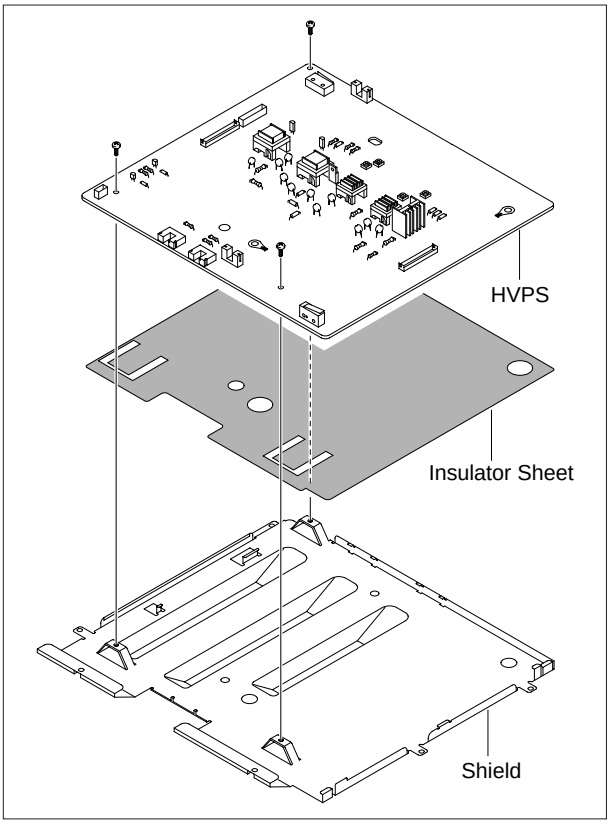

5.21 Middle Cover Ass'y

1. Before you remove the Middle Cover Ass'y, you should remove:
   - Side Cover (Left, Right) (Refer to 5.7)
   - Scanner Ass'y (Refer to 5.10)
   - Shield Controller Ass'y (Refer to 5.11)

2. Remove the six screws securing the Middle Cover Ass'y and remove it.

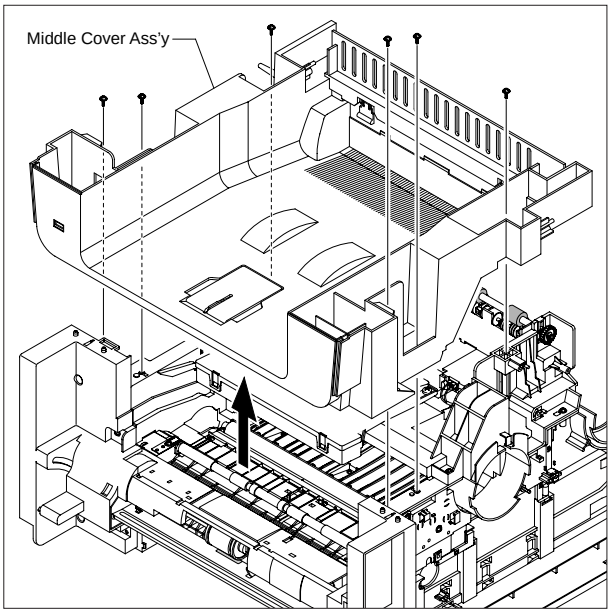

3. If necessary, remove the two screws securing the USB Host PBA and remove it.

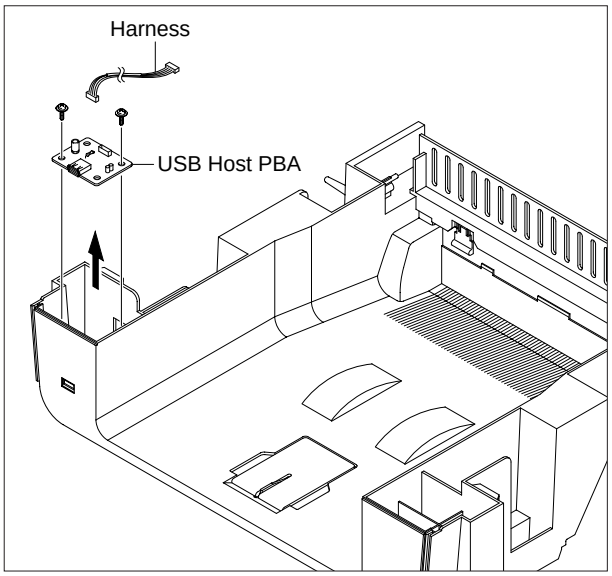

5.22 Cover Mid Front

1. Before you remove the Cover Mid Front, you should remove:
   - Middle Cover Ass'y (Refer to 5.21)

2. Remove the four screws securing the Cover Mid Front and release two hooks in the center. This cover is fragile take care when removing it.

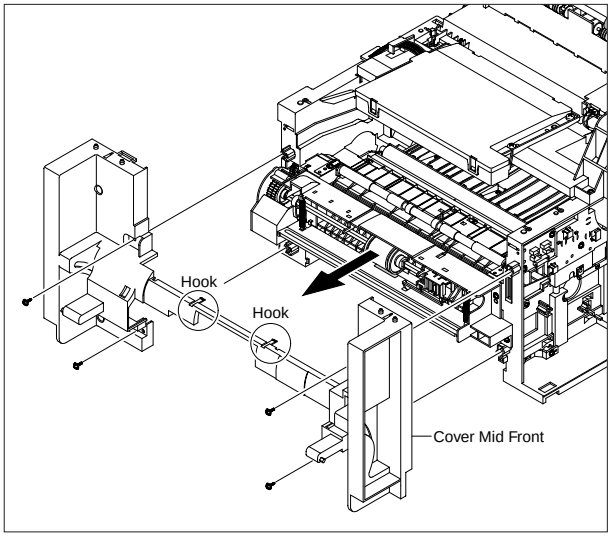

5.23 MPF Housing

1. Before you remove the MPF Housing, you should remove:
   - Cover Mid Front (Refer to 5.22)

2. Remove the four screws securing the MPF Housing and remove it.

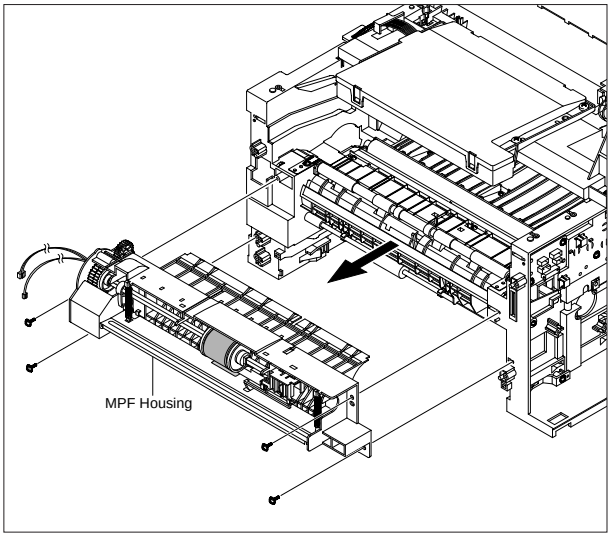

3. To remove the MP Pick Up Ass'y, first lift the notch attached to the left side Stopper so that it's slide the right to left from the Shaft, then left side Idle slid the right to left from the Shaft and take out the MP Pick Up Ass'y, as shown below.

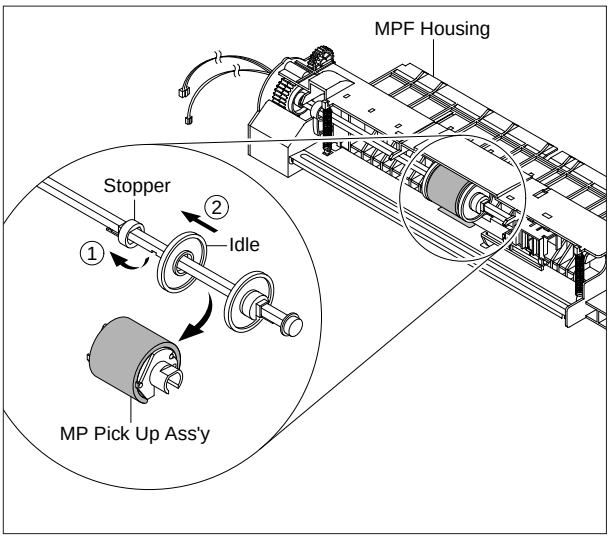

Notice : Do not grab the rubber part of the Feed1 Roller, it may cause a malfunction due to a foreigen object.

5.24 Feed Roller Parts

1. Before you remove the Feed Roller Parts, you should remove:
   - Pick Up Roller Ass'y (Refer to 5.18)
   - Duplex Guide Housing (Refer to 5.19)
   - Middle Cover Ass'y (Refer to 5.21)
   - MPF Housing (Refer to 5.23)

2. Remove the two screws securing the both side of the Plate Push Bushing and then remove the Guides.

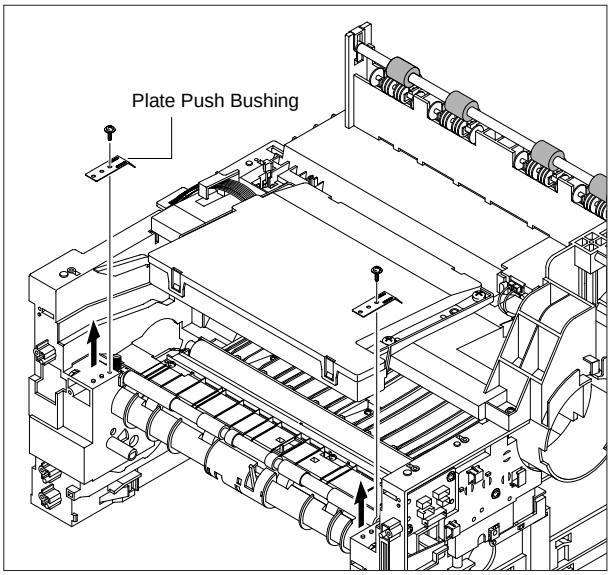

3. Pull up the Feed Idle Shaft and the Bushs (with Spring).

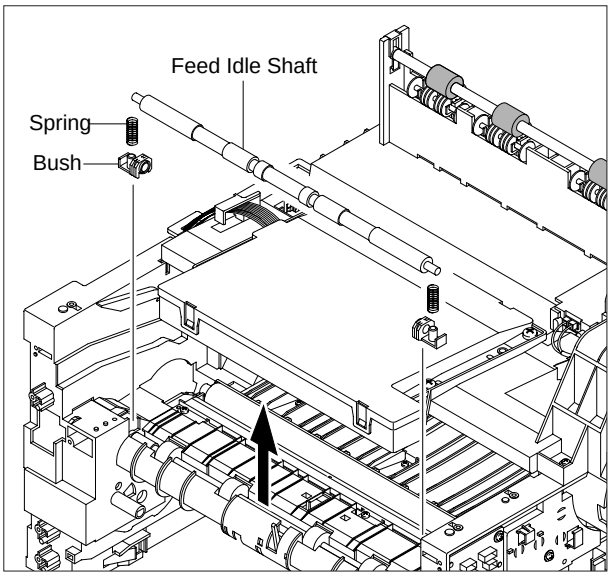

4. Release the E-Ring securing the Feed2 Gear and remove it.

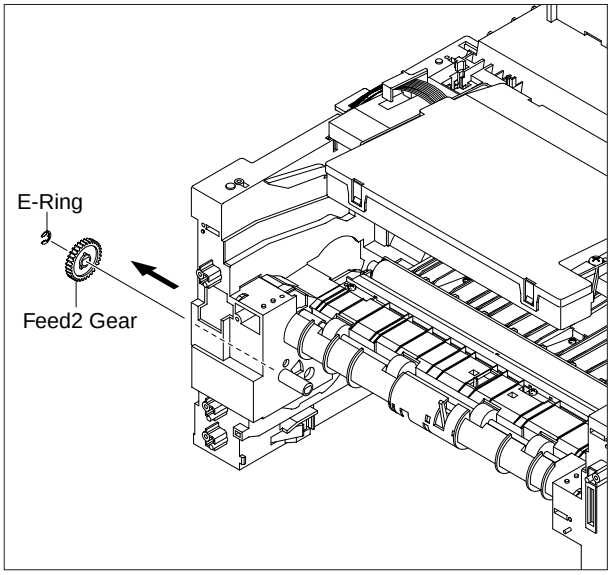

5. Remove the three screws securing the Feed Bracket Unit and then remove the Feed Bracket Unit and Feed2 Shaft.

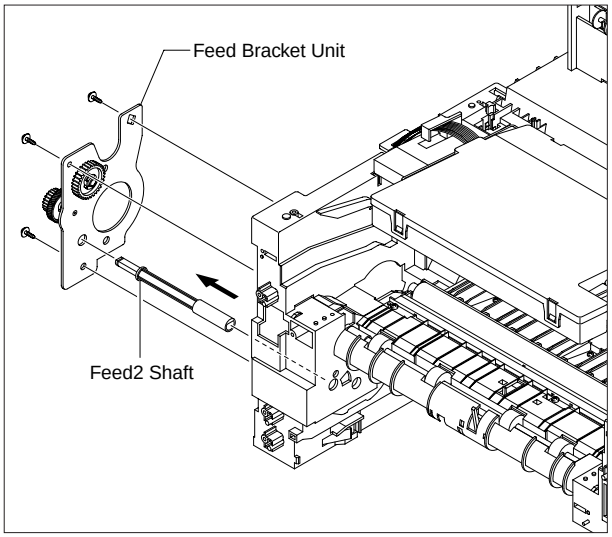

6. If necessary, release the three E-Rings securing the Gears (T2 Idle, Retard, Idle) and then remove the Gears from the Feed Bracket, as shown below.

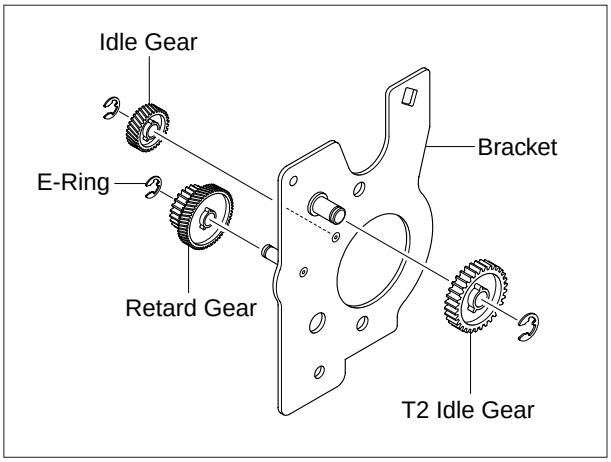

Notice : Be aware of the E-Rings to ensure they are not lost.

7. Remove the Clutch Unit, as shown below.

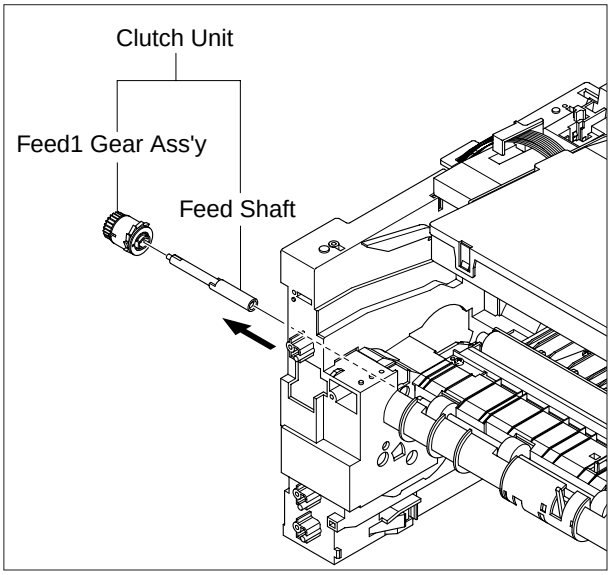

8. Pull up the Feed1 Roller from the Bushing, as shown below.

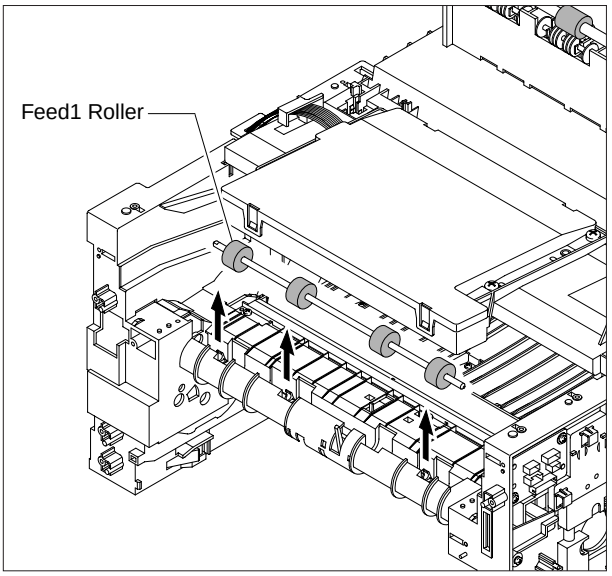

Notice : Do not grab the rubber part of the Feed1 Roller, it may cause a malfunction due to a foreigen object.

5.25 Pick Up Gear Ass'y & Solenoids

1. Before you remove the Pick Up Gear Ass'y & Solenoids, you should remove:
   - Duplex Guide Housing (Refer to 5.19)
   - Feed Bracket Unit (Refer to 5.24.5)

2. Release the Pick Up Gear Ass'y and Pick Up Gear Shaft, as shown below.

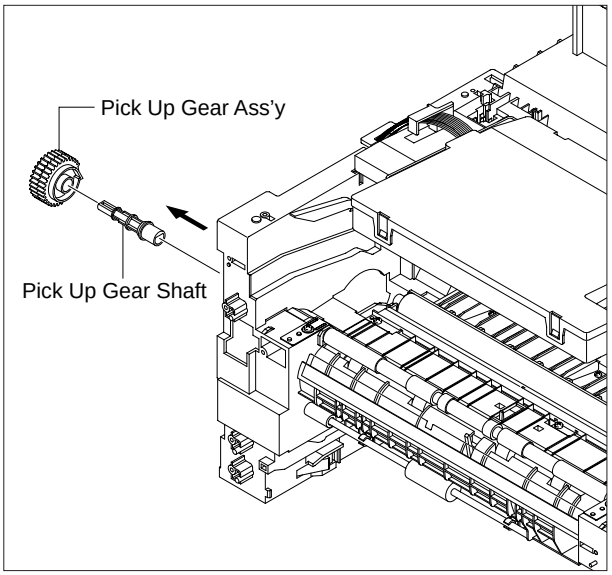

3. Remove the two screws securing the Manual Solenoid and Feed Solenoid and then remove the Solenoids, as shown below.

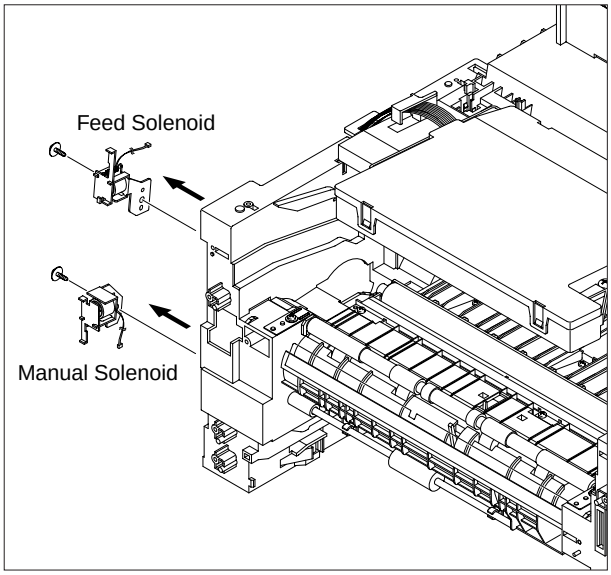

5.26 Exit Roller

1. Before you remove the Exit Roller, you should remove:
   - Fuser Drive Ass'y (Refer to 5.16)
   - Middle Cover Ass'y (Refer to 5.21)

2. Remove the Exit Gear, and release the Bearing at one end then remove the Roller Exit F/Down and Exit Roller Rack, as shown below.

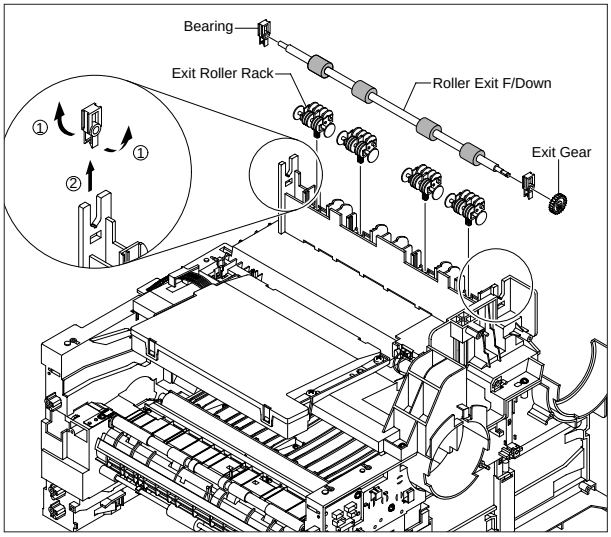

Notice : Do not grab the rubber part of the Feed1 Roller, it may cause a malfunction due to a foreigen object.

5.27 LSU

1. Before you remove the LSU, you should remove:
   - Middle Cover Ass'y (Refer to 5.21)

2. Remove the four screws securing the LSU and remove it.

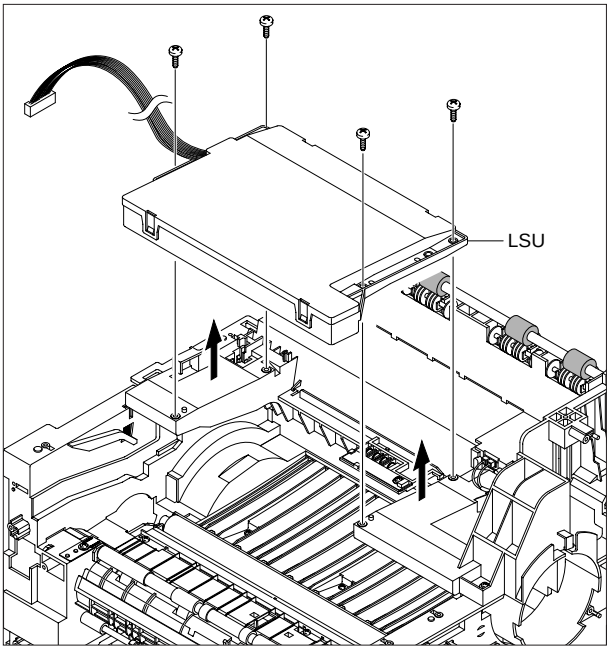

5.28 CRUM2 PBA

1. Before you remove the CRUM2 PBA, you should remove:
   - Middle Cover Ass'y (Refer to 5.21)
   - LSU (Refer to 5.27)

2. Remove the one screw securing the CRUM2 PBA and remove it and then release the four Terminals, as shown below.

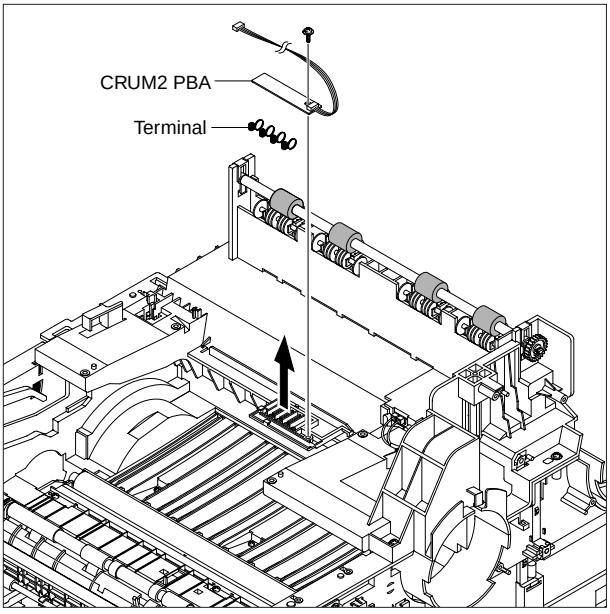

Notice : Be aware of the Terminals to ensure they are not lost.

5.29 Transfer Roller Parts

1. To remove the Transfer Roller, first pull the TR Holder and then take out the Transfer Roller, as shown below.

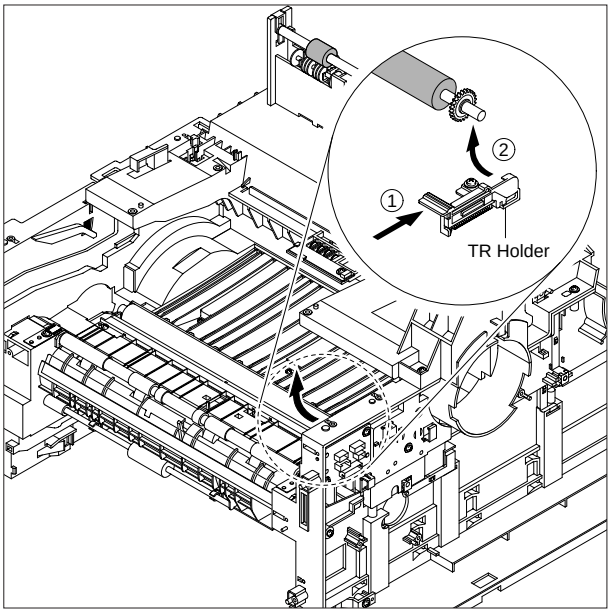

Notice : Do not grab the rubber part of the Transfer Roller, it may cause a malfunction due to a foreigen object. Hole the both side of the Transfer Roller when replacing it.

6. Troubleshooting

6.1 Procedure of Checking the Symptoms

Before attempting to repair the printer first obtain a detailed description of the problem from the customer.

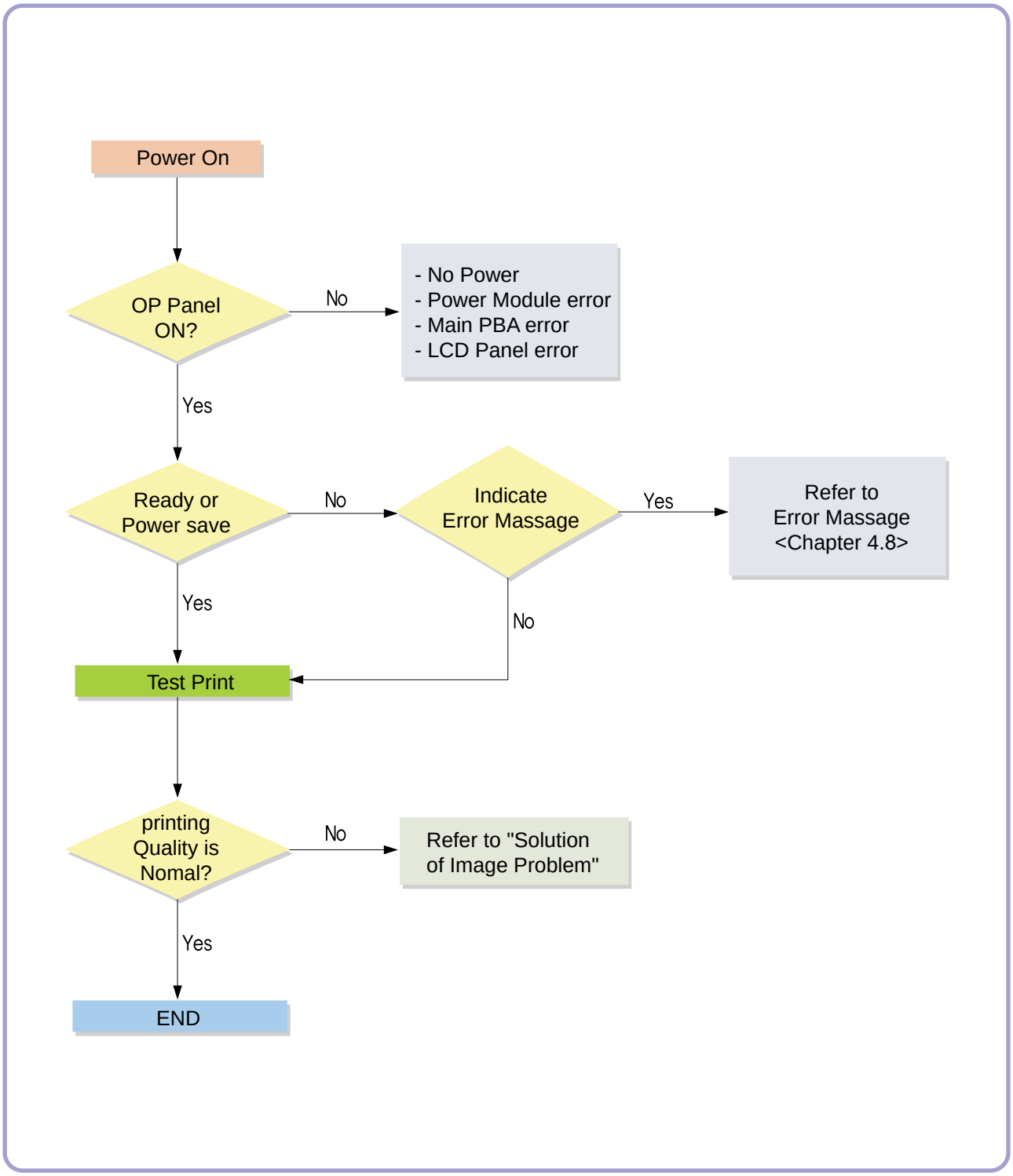

6.2 Paper Feeding Problems

6.2.1 Wrong Print Position

• **Description** Printing begins when the paper is in the wrong position.

Check and Cause	Solution
A defective feed sensor actuator can cause incorrect timing.	Replace the defective actuator

6.2.2 JAM 0

• **Description**
1. Paper has not exited from the cassette.
2. Jam-0 occurs if the paper feeds into the printer.

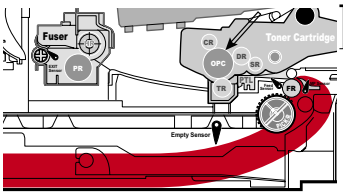

Check and Cause	Solution
1. Check the Solenoid by using Engine Test Mode.	1. Replace the solenoid.
2. Check the surface of the roller-pick-up for foreign matter.	2. Clean with soft cloth dampened with IPA(Isopropyl Alcohol) or water.
3. If continuous clusters occur, check whether the assembly slot between shaft-pickup and housing-pickup become open or is broken away.	3. Replace the Housing-Pickup and/or Shaft-Pickup.
4. If the paper feeds into the printer and Jam 0 occurs, perform Component Test Mode to check feed-sensor of the engine board.	

6.2.3 JAM 1

• Description

1. Recording paper is jammed in front of or inside the fuser.
2. Recording paper is stuck in the discharge roller and in the fuser just after passing through the Actuator-Feed.

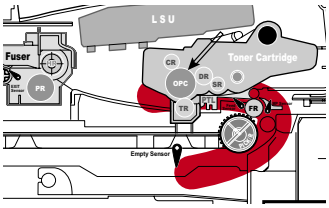

Check and Cause	Solution
1. If the recording paper is jammed in front of or inside the fuser.	1. Replace the HVPS.
2. If the recording paper is stuck in the discharge roller and the fuser just after passing through the Actuator-Feed, Feed Actuator may be defective.	2. Reassemble the Actuator-Feed and Spring-Actuator if the return is bad.

6.2.4 JAM 2

• Description

1. Recording paper is jammed in front of or inside the fuser.
2. Recording paper is stuck in the discharge roller and in the fuser just after passing through the Actuator-Feed.

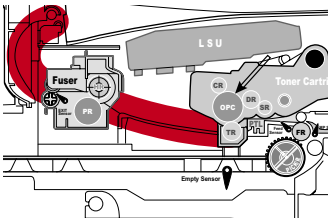

Check and Cause	Solution
1. If the paper is completely fed out of the printer, but Jam 2 occurs : Exit sensor is defective. • After the paper is completely discharged, actuator Exit should return to the original position to shut off the photo-sensor. Sometimes it takes longer than it should and does not return.	1. Check if the exit sensor actuator is defective. • Check if the actuator exit is deformed (Check if the lever part is deformed in shape). • Check whether burrs occur in the assembly part of the actuator exit or not and if the actuator is smoothly operated. • Check if foreign matters and wire get caught in the actuator exit's operation.
2. If the paper is rolled in the Fuser Roller: • This occurs when a Guide claw is broken away or transformed. • It occurs when the Guide claw spring is broken away or transformed. • It occurs when the Heat-Roller or Pressure-Roller is seriously contaminated with toner powder.	2. If the paper is stuck in the fuser : disassemble the fuser and remove the jammed paper, and clean the surface of the pressure roller with dry gauze.
3. Paper is accordion jammed in fuser.	3. Remove the jammed paper after disassembling the fuser : Clean the surface of the pressure roller with dry gauze. • Remove the toner particles stained on the rib. • Check the assemblage and performance of the exit.

6.2.5 Multi-Feeding

• **Description** Multiple sheets of paper are fed at once.

Check and Cause	Solution
1. Solenoid malfunction(the solenoid does not work properly): Perform Engine Test Mode.	1. Replace the solenoid if necessary.
2. Friction-Pad is contaminated with foreign matter.(oil..)	2. Clean the friction-pad with soft cloth dampened with IPA(Isopropyl Alcohol).
3. The face of paper is blended.	3. Use the smooth paper.

6.2.6 Paper rolled in the fuser

• **Description** Paper rolled in the fuser 100.5mm

Check and Cause	Solution
1. Contamination of the pressure roller or heat roller (Background, Hot off set).	1. After disassembling the fuser, clean contamination between the heat roller and the thermostor and remove the contamination of the pressure roller.
2. Check the claw of the fuser whether it is deformed.	2. If there is heavy background, repair it by the background troubleshooting method.
	3. Clean the surface of the heat roller with IPA or water.
	4. Check the warp or separation of the print claw and the holder plate claw, and then manage it.

6.2.7 Paper rolled in the OPC

• **Description** Paper is rolled up in the OPC.

Check and Cause	Solution
1. Paper is too thin.	1. Recommend to use normal paper thickness.
2. The face of paper is curled.	2. How to remove the rolled paper in the OPC. • Remove the paper while turning the OPC against the ongoing direction. • Clean fingerprints on the OPC softly with soft cloth dampened with IPA(Isopropyl Alcohol) or tissue.

6.2.8 Defective ADF

• **Description** ADF (Automatic document Feeder) is not properly operated.

Check and Cause	Solution
1. Check if ADF rubber and HOLDER rubber are damaged.	1. Replace the contaminated or damaged part.
2. Check if the document sensors of ADF Ass'y (3 paper sensors) are normal.	2. If you cannot confirm the damaged part with the naked eye, try to replace the ADF Ass'y.

6.3 Printing Problems (malfunction)

6.3.1 Defective Operation (LCD WINDOW ■ ■ ■) Display

• **Description** Strange characters are displayed on the OPE Panel and buttons are not operated.

Check and Cause	Solution
1. Clear the memory. 2. Check if OPE HARNESS is connected to the Connection B'd correctly.	1. Try again after clearing the memory. 2. After confirming that OPE HARNESS is connected to the Connection B'd correctly, if it is so, then replace the OPE Ass'y and Main Board in sequence.

6.3.2 Defective LCD Operation

• **Description** **Defective LCD Operation**

Check and Cause	Solution
1. Clear the memory. 2. Confirm to catch a click sound, while a key on the OPE panel is pressed on.	1. The key is wrong itself or wrongly assembled. 2. Even after the key has been replaced, it is still wrong, try to replace the OPE Ass'y and the Main B'd in sequence.

6.3.3 Not functioning of the fuser gear due to melting away

• **Description** The Motor breaks away from its place due to gear melting away.

Check and Cause	Solution
1. Check the Heat Lamp.	1. Replace the Fuser. 2. Replace the Main PBA. 3. Replace the SMPS.

6.3.4 Paper Empty

• **Description** The paper empty status on the operator panel is on even when paper is loaded in the cassette.

Check and Cause	Solution
1. Bending or deformation of the actuator of the paper sensor.	1. Replace the defective actuator.
2. The function of the Main PBA is defective Perform Engine Test Mode.	2. Replace the Main PBA.

6.3.5 Paper Empty without indication

• **Description** The paper empty status on the operator panel does not come on when the paper cassette is empty.

Check and Cause	Solution
1. Bending or deformation of the actuator of the paper sensor.	1. Replace the defective actuator.
2. The function of the Main PBA is defective Perform.	2. Replace the Main PBA.

6.3.6 Door Open

• **Description** Door open status is on even when the print Door is closed.

Check and Cause	Solution
1. The hook lever in the Front Cover may be defective.	1. Replace the hook lever, if defective.
2. Check the Connector(CN1) and Circuit of the Cover Switch department in the Main PBA.	2. Check the insertion of the Door Open S/W Connect. 3. Replace the Main PBA or Door Open S/W.

6.3.7 No Beep on when the Door is open

• **Description** Door open status does not come on even when the printer Door is open.

Check and Cause	Solution
Check the Connector(CN1) and Circuit of the Cover Switch department in the Main PBA.	1. Check the insertion of the Door S/W Connect. 2. Replace the Main PBA or Door Open S/W.

6.3.8 Defective Motor operation

• **Description** Main Motor is not driving when printing, and paper does not feed into the printer, resulting 'Jam 0'.

Check and Cause	Solution
1. Motor harness or sub PCB may be defective.	1. Check the Motor harness, replace it, if defective.
2. Perform Engine Test Mode and Check the Motor operation.	2. Replace the SMPS, if necessary.

6.3.9 No Power

• **Description** When system power is turned on, all lamps on the operator panel do not come on.

Check and Cause	Solution
1. Check if the power input and SMPS output are normal.	1. Replace the power supply cord or SMPS.
2. Check for defective of LCD-Panel on the front-cover if the LCD of Panel does not appear after normal warming-up.	2. Replace the control board. 3. Replace the LCD-panel.

6.3.10 Vertical Line Getting Curved

• **Description** When printing, vertical line gets curved.

Check and Cause	Solution
1. If the supply of +24v is unstable in the Main Control board linking with LSU, check drive by Engine Test Mode.	1. Replace LSU. 2. Replace the Main Control board.

6.3.11 Duplex Jam 1

• **Description** A message 'Duplex Jam 1' is displayed in a LCD window.

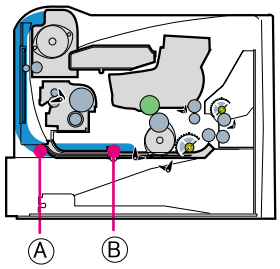

Check and Cause	Solution
1. It is a case when a paper cannot operate a duplex sensor.	1. Replace a HVPS or main PBA
2. It is a case when a paper cannot reach to a duplex sensor due to a paper jam on a duplex path.	2. A case that a paper jam occurs on (A) after it is reversed: replace a 2nd exit roller after checking its operation.
3. When duplex unit relationship life time became all.	3. A case that a paper jam occurs on (B) after it is reversed: replace a duplex roller after checking its operation 4. Replace a Duplex unit.

6.3.12 Duplex Jam 0

• **Description** A message 'Duplex Jam 0' is displayed in a LCD window.

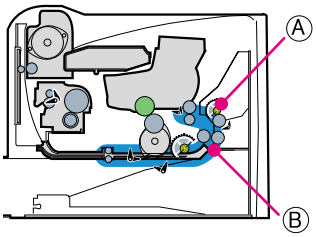

Check and Cause	Solution
1. It is a case that a paper cannot pass a Duplex sensor.	1. Replace a HVPS or main PBA.
2. It is a case that a paper cannot reach to a registration sensor after it is passed a duplex sensor.	2. A case that a leading edge of a paper is jammed on (A) check an operation of a guide front. If it is worn or defective, replace it.
3. When duplex unit relationship life time became all.	3. Check an operation of a feed roller and a registration roller. If they are worn or defective replace them. 4. Replace a Duplex unit.

6.4 Printing Quality Problems

6.4.1 Vertical Black Line and Band

• **Description**
1. Straight thin black vertical line occurs in the printing.
2. Dark black vertical band occur in the printing.

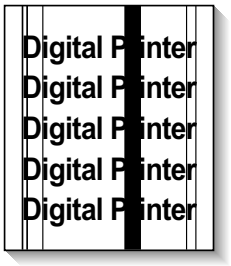

Check and Cause	Solution
1. Damaged develop roller in the Developer. Deformed Doctor-blade.	1. If causes 1 and 2 occur in the developer cartridge, replace the developer and try to print out.
2. Scratched surface of the charge roller in the developer.	2. Replace the transfer roller if occurred as No. 3.
3. Partial depression or deformation on the surface of the transfer roller.	

6.4.2 Vertical White Line

• **Description** White vertical voids in the image.

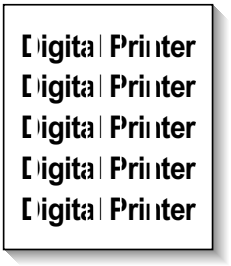

Check and Cause	Solution
1. Foreign matter stuck onto the window of internal lenses of LSU mirror.	1. Foreign matter stuck onto the window : Clean the LSU window with recommended cleaner(IPA) Clean the window with a clean cotton swab.
2. Foreign matter or toner particles between the developer roller and blade. (In case the life of the developer has been expired, white lines or light image occur in front of the image.)	2. Foreign matter in the LSU : Open the cover of LSU and clean with a cotton swab on the surface of the reflex mirror.
3. It may occur when a Burr and foreign substances are on the window of the developer frame.	3. No 3. : Remove the foreign matter and burr of the exposure window. (Developer cartridge)
4. If the fuser is defective, voids occur periodically at the top of a black image.	4. No. 4. : Open the front cover and check ribs that corresponds to the position of the voids. Remove if found.
	5. If the problems are not solved, replace the developer cartridge.

6.4.3 Horizontal Black Band

• Description

1. Dark or blurry horizontal stripes occur in the printing periodically. (They may not occur periodically.)

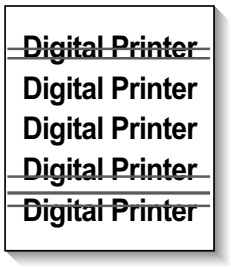

Check and Cause	Solution
1. Bad contacts of the voltage terminals to developer.	1. Clean each voltage terminal of the Charge, Supply, Develop and Transfer roller. (remove the toner particles and paper particles)
2. The rollers of developer may be stained. Charge roller = 37.7 mm Supply roller = 53 mm Develop roller = 39 mm Transfer roller = 45.3 mm	2. Clean the right Gear that has a relatively small gap of the teeth in the OPC.
	3. If the malfunction persists, replace the developer.

6.4.4 Black/White Spot

• Description

1. Dark or blurry black spots occur periodically in the printing.
2. White spots occur periodically in the printing.

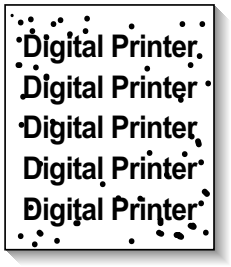

Check and Cause	Solution
1. If dark or blurry black spots occur periodically, the rollers in the Developer may be contaminated with foreign matter or paper particles. (Charge roller : 37.7 mm interval OPC drum : 75.5 mm interval)	1. Run OPC cleaning Mode Print and run the Self-test 2 or 3 times.
2. If faded areas or voids occur in a black image at intervals of 75.5 mm, or black spots occur elsewhere, the OPC drum surface is damaged.	2. In case of 75.5 mm interval unremovable in 1, cleanly remove foreign substances stuck on the OPC location equivalent to black spots and white spots with a dry duster.
3. If a black image is partially broken, the transfer voltage is abnormal or the transfer roller's life has expired.	3. The transfer roller guarantees 70,000 sheets printing. If the roller's life is expired, replace it.
	4. In case of 37.7 mm interval unremovable in 1, take measures as to replace the developer cartridge and try to print out.
	5. Clean the inside of the set against the paper particles and foreign matter in order not to cause the trouble.

6.4.5 Light Image

• **Description** The printed image is light, with no ghost.

Check and Cause	Solution
1. Develop roller is stained when the toner of developer cartridge is almost consumed.	1. Check if the Toner Save Mode is off.
2. Ambient temperature is below than 10°C.	2. No 1 : Replace the developer cartridge and try to print out.
3. Bad contact caused by the toner stains between the high voltage terminal in the HVPS and the one in the set.	3. No 2 : Wait 30 minutes after printer is powered on before you start printing.
4. Abnormal output from the HVPS. (Run self-test and check 1~4)	4. No3 : Clean up the contaminated area by the toner.
	5. Replace the HVPS if the problems are not solved by the above four directions.

6.4.6 Dark Image or a Black

• **Description** The printed image is dark.

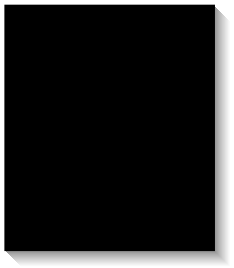

Check and Cause	Solution
1. No charge voltage in the Main PBA. (Perform Engine Test Mode : Diagnostic code 4 HVPS check.)	1. Clean the high voltage charge terminal.
2. Charge voltage is not turned on due to the bad contacts between power supply in the side of the Developer and charge terminal of HVPS.	2. Check the state of the connector which connects the engine board and HVPS.
	3. If steps 1 and 2 above did not correct the problem, replace the HVPS .

6.4.7 Uneven Density

• **Description** Print density is uneven between left and right.

Digital Printer
Digital Printer
Digital Printer
Digital Printer
Digital Printer

Check and Cause	Solution
1. The pressure force on the left and right springs of the transfer roller is not even, the springs are damaged, the transfer roller is improperly installed, or the transfer roller bushing or holder is damaged.	1. Replace both the left and right Spring Holder.
2. The life of the Developer has expired.	2. Problem with the toner cartridge, replace the toner cartridge and try to print out.
3. The toner level is not even on the developer roller due to the bad blade.	

6.4.8 Background

• **Description** Light dark background appears in whole area of the printing.

Digital Printer
Digital Printer
Digital Printer
Digital Printer
Digital Printer

Check and Cause	Solution
1. Recycled recording paper has been used.	1. Quality is not guaranteed when using recycled paper.
2. The life of the Developer has expired.	2. Replace the toner cartridge.
3. The up-to-down movement of the transfer roller is swift?	3. Clean the busing on the transfer roller.
4. The HVPS is normal? (Perform Engine Test Mode diagnostic code 4)	4. Replace the HVPS.

6.4.9 Ghost (1)

• **Description** Ghost occurs at 75.5 mm intervals of the OPC drum in the whole printing.

Check and Cause	Solution
1. Bad contacts caused by contamination from toner particles between high voltage terminal in the main body and the electrode of the Developer.	1. Clean the contaminated terminals.
2. Bad contacts caused by contamination from toner particles between high voltage terminal in the main body and the one in the HVPS board.	2. Problem in the toner cartridge, replace the toner cartridge and try to print out.
3. The life of developer is expired.	3. Replace the engine board if not solved by the above directions 1-2.
4. Transfer roller lifetime(70,000 sheets) has expired.	4. If not solved by the direction 3, check the transfer roller lifetime and replace it.
5. Abnormal low temperature(below 10°C).	5. Wait about 1 hour after power on before using printer.
6. Damaged cleaning blade in the developer.	6. Problem in the toner cartridge, replace the toner cartridge and try to print out.

6.4.10 Ghost (2)

• **Description** Ghost occurs at 75.5 mm intervals of the OPC drum in the whole printing.
(When printing on card stock or transparencies using manual feeder)

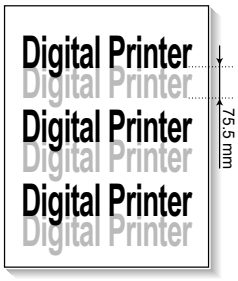

Check and Cause	Solution
When printing on card stock thicker than normal paper or transparencies such as OHP, higher transfer voltage is required.	Select 'Thick Mode' on paper type menu from the software application and after use, we recommend returning to the original Mode.

6.4.11 Ghost (3)

• **Description** White ghost occurs in the black image printing at 35.2 mm intervals.

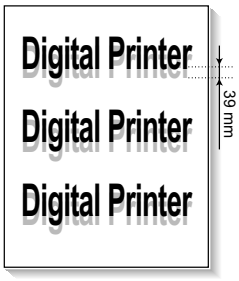

Check and Cause	Solution
1. The life of the developer may be expired.	1. Problem in the toner cartridge, replace the toner cartridge and try to print out.
2. The abnormal voltage and bad contact of the terminal of the developing roller	2. Check the approved voltage of the supply roller and contact of the terminal and adjust if necessary.

6.4.12 Ghost (4)

• **Description** Ghost occurs at 88.9 mm intervals.

Check and Cause	Solution
The temperature of the fuser is maintained high.	1. Disassemble the fuser and remove the contaminated toner particles on the roller and clean the foreign matter between Thermistor and Heat roller. (⚠ Caution: can be deformed)

6.4.13 Stains on the front of the page

• **Description** The background on the face of the printed page is stained.

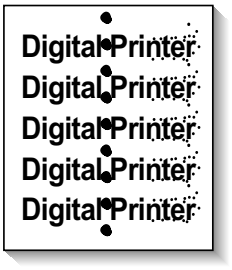

Check and Cause	Solution
1. Toner leakage due to improperly sealed developer.	1. Replace the toner cartridge.
2. If the transfer roller is contaminated, stains on the face of page will occur.	2. If the transfer roller is contaminated, run PC Cleaning Mode Print 2 or 3 times. And perform Self-Test 2 or 3 times to remove contamination.

6.4.14 Stains on back of the page

• **Description** The back of the page is stained at 47.1 mm intervals.

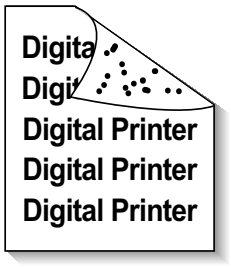

Check and Cause	Solution
1. Transfer roller is contaminated.	1. Perform the OPC Cleaning Mode Print 2 or 3 times. Run Self-Test to remove the contamination of the transfer roller.
2. Pressure roller is contaminated.	2. Replace the transfer roller if contaminated severely.
	3. Disassemble the fuser and clean the H/R(Heat Roller) and P/R(Pressure roller). And check the area between H/R and Thermistor. If contaminated, clean the area is should not be deformed.

6.4.15 Blank Page Print out (1)

• **Description** Blank page is printed.

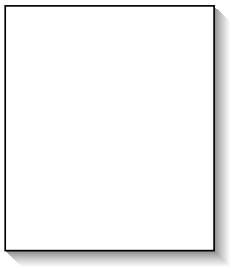

Check and Cause	Solution
Bad ground contacts in OPC and/or developer.	Remove contamination of the terminals of the toner cartridge and the printer.

6.4.16 Blank Page Print out (2)

• **Description**
1. Blank page is printed.
2. One or several blank pages are printed.
3. When the printer turns on, several blank pages print.

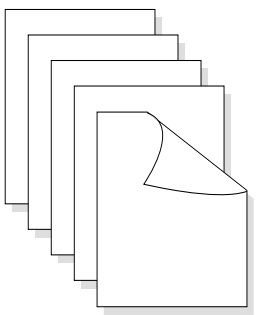

Check and Cause	Solution
1. Bad ground contacts in OPC and/or developer.	1. Remove contamination of the terminals of the toner cartridge.
2. Abnormal solenoid.	2. Perform the engine self test using Engine Test Mode diagnostic Mode code 0 if the Solenoid is normal.
	3. If not solved by the above directions 1-2, Replace the engine board.
	4. Turn the power off, clear the print job on the computer, and try printing again.

6.5 Fax & Phone Problems

6.5.1 No Dial Tone

• **Description** While on-hook button is pressed, there is no dial tone.

Check and Cause	Solution
1. Check if the telephone line cord is connected to TEL LINE correctly.	1. If the telephone cord is normal but there is no dial tone, then try to replace the LIU B'd.
2. Check if it makes CLICK sound while OHD key is pressed.	2. If you cannot hear the OHD CLICK sound, the OPE Ass'y may be defective. Try to replace the OPE Ass'y.
3. Check the connection of HARNESS between the LIU and the Main B'd.	3. Check the Speaker connection, and try to replace it.
4. Check if the SPEAKER is connected correctly.	4. Lastly, try to replace the Main B'd.

6.5.2 Defective MF DIAL

• **Description** The MF DIAL is not functioning.

Check and Cause	Solution
1. Check if the telephone line is connected correctly.	1. If you cannot catch the OHD CLICK sound, the OPE Ass'y may be defective. Try to replace the OPE Ass'y.
2. Wile the BUTTON KEY is pressed, check to catch a CLICK sound.	2. If you can catch a CLICK sound, after checking the connection of HARNESS between the LIU and the Main PBA, try to replace the HARNESS.
3. Check the connection of HARNESS between the LIU and the Main PBA.	3. The problem still persists, then replace the LIU and the main B'd in sequence.
	Notes: Product supports the MF DIAL type only.

6.5.3 Defective FAX FORWARD/RECEIVE

• **Description** The FAX FORWARD/RECEIVE is not functioning.

Check and Cause	Solution
1. Check if you can catch a dial tone by pressing OHD. 2. Check if you can catch a RECEIVE tone while MODEM testing in the TECH Mode.	1. If the MODEM testing is normal and there is no dial tone, then try to replace the LIU B'd. 2. If the MODEM testing is abnormal, try to replace the Main B'd.

6.5.4 Defective FAX FORWARD

• **Description** RECEIVE is functioning, but FORWARD is not functioning or the received data are broken.

Check and Cause	Solution
1. Check if there is NOISE when pressing on-hook dial. 2. Check the RECEIVE condition by trying to forward a FAX to another fax machine from the forwarding side FAX. 3. Check if the telephone line connected to the Product is contaminated or gets stripped off or down.	1. If it makes NOISE while using on-hook dial, replace or repair the telephone line.

6.5.5 Defective FAX RECEIVE (1)

• **Description** FORWARD is functioning, but RECEIVE is not functioning or the received data are broken.

Check and Cause	Solution
1.Check if there is NOISE when pressing on-hook dial. 2.Check the RECEIVE condition by trying to receive a FAX at another fax machine.	1.If it makes NOISE while on-hooking, replace or repair the telephone line.

6.5.6 Defective FAX RECEIVE (2)

• **Description** The received data are lengthened or cut in the printing.

Check and Cause	Solution
1. Check if there is NOISE when pressing on-hook dial. 2. Ask to the forwarding side, check the image quality of another machine receiving a FAX additionally sent to.	1. If it makes NOISE, rearrange the telephone line. (Refer to 'Defective FAX RECEIVE'.) 2. Check if the FAX status of the forwarding side is also normal.

6.5.7 Defective FAX RECEIVE (3)

• **Description** The phone is ringing continuously, but it cannot receive.

Check and Cause	Solution
Check if the RECEIVE Mode is TEL MODE or FAX MODE.	Even when the RECEIVE Mode is changed to FAX MODE, it cannot receive, then replace the LIU and the Main B'd in sequence.

6.5.8 Defective FAX RECEIVE (4)

• **Description** The received data is reduced by more than 50% in the printing.

Check and Cause	Solution
Check the FAX status of the forwarding side.	After checking the data of the forwarding side, correct the FAX of the forwarding side.

6.5.9 Defective Automatic Receiving

• **Description** The automatic receiving function is not working.

Check and Cause	Solution
1. Check if the RECEIVE Mode is TEL MODE or FAX MODE.	1. If the RECEIVE Mode is set to the TEL MODE, reset it to the FAX MODE. 2. Even after the RECEIVE Mode is changed to the FAX Mode, it cannot receive, then try to replace the LIU and the Main B'd in sequence.

6.6 Copy Problems

6.6.1 White Copy

• **Description** Blank page is printed out when copy.

Check and Cause	Solution
1. Check the Scan-Cover open.	1. Room light ca transit a thin original.
2. Check shading profile.	2. Remake shading profile in the tech mode.
3. Check white/black reference voltage in Main PBA.	3. Replace U60 if it is defective. • U60-154 = 0.5V • U60-155 = 3.3V

6.6.2 Black Copy

• **Description** Black page is printed out when Copy.

Check and Cause	Solution
1. Check the CCD problem in Main PBA.	1. Check the CCD harness contact.
2. Check shading profile.	2. Remake shading profile in the tech mode.

6.6.3 Abnormal noise

• **Description** There is noise when copy.

Check and Cause	Solution
1. Check the Scanner Motor and any mechanical disturbance.	1. Check the right position of the Scanner Motor, and check the any mechanical disturbance in the CCD carriage part.
2. Check the Motor Driver in Driver PBA.	2. If any driver is defective, replace it. • Connection PBA U4-1, 19 or U5-1, 19=0V to 24V swing signal when operating.

6.6.4 Defective Image Quality

• **Description** The copied image is light or bad.

Check and Cause	Solution
1. Check shading profile.	1. Remake shading profile in the tech mode.
2. Check the gap between original and scanner glass.	2. The gap above 0.5 mm can cause a blurred image.
3. Check printing quality.	3. See “Print” troubleshooting.

6.7 Scanning Problems

6.7.1 Defective PC Scan

• **Description** The PC Scan is not functioning at all.

Check and Cause	Solution
1. Check the Cable (USB or Parallel)	1. If the PC and the cable are not connected properly, reconnect it.
2. Check if the driver is installed properly.	2. After confirming that it is proper by performing a PC printing test related to driver setup, if it is not so, reinstall it. (Refer to User's Manual.)
3. Check if copy function operates normally.	3. If copy function works, replace the Main PBA. If copy function doesn't work, replace the CCD Ass'y and try again.

6.7.2 Defective Image Quality of PC Scan

• **Description** The image PC scanned is not clear or bad.

Check and Cause	Solution
1. Check the waveform form by performing a CCD test in TECH Mode.	1. If the CCD waveform form is abnormal, try to replace the CCD Ass'y.
2. Check if the resolution is set too low in PC Scan options. (Refer to User's Manual.)	2. If the resolution is set to low, let the user be acquainted with the using method well.

6.8 Toner Cartridge Service

It is not guaranteed for the default caused by using other toner cartridge other than the cartridge supplied by the Samsung Electronic or caused by non-licensed refill production.

6.8.1 Precautions on Safe-keeping of Toner Cartridge

Excessive exposure to direct light more than a few minutes may cause damage to the cartridge.

6.8.2 Service for the Life of Toner Cartridge

If the printed image is light due to the life of the toner, you can temporarily improve the print quality by redistributing the toner(Shake the toner cartridge), however, you should replace the toner cartridge to solve the problem thoroughly.

6.8.2. 1 Redistributing Toner

When the toner cartridge is near the end of its life, white streaks or light print occurs. The LCD displays the warning message, “Toner Low.” You can temporarily reestablish the print quality by redistributing the remaining toner in the cartridge.

1. Open the Front Cover.

2. Lightly pushing the used cartridge down, pull it out.

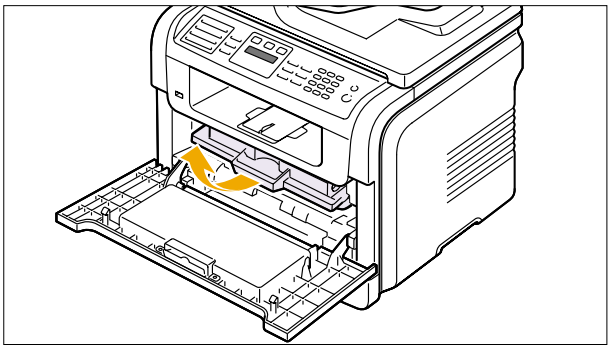

Note : Help the environment by recycling your used toner cartridge. Refer to the recycling brochure packed with the toner cartridge for details.

3. Unpack the new toner cartridge and gently shake it horizontally four or five times to distribute the toner evenly inside the cartridge.

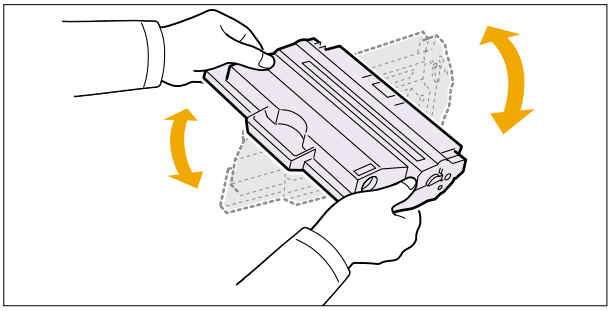

4. Save the box and the cover for shipping. Slide the new toner cartridge in until it locks into place.

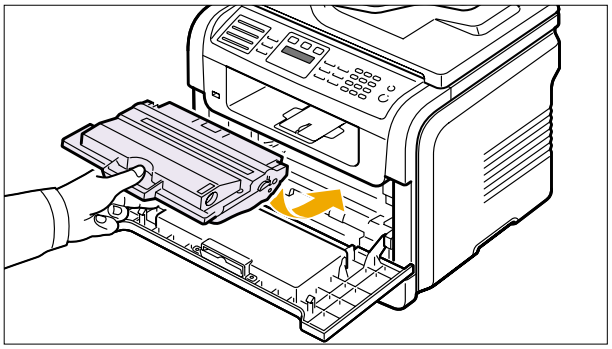

5. Close the front cover.

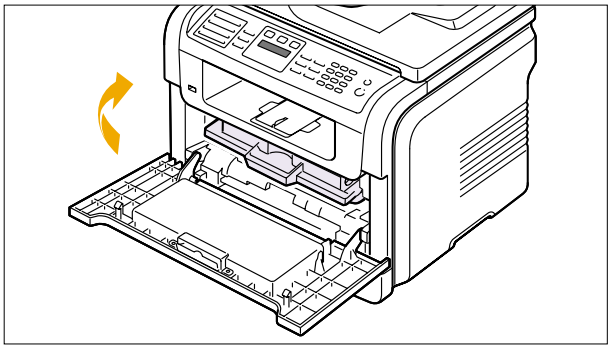

6.8.3 Service for Judgement of Inferior Expendables and the Standard of Guarantee

Please refer to User's Manual or Instructions on Fax/Printer Expendables SVC for the judgement of inferior expendables and the standard of guarantee besides this service manual.

6.8.4 Signs and Measures at Poor toner cartridge

Fault	Signs	Cause & Check	Solution
Light image and partially blank image (The life is ended.)	• The printed image is light or unclean and untidy. • Some part of the image is not printed. • Periodically a noise as "tick tick" occurs.	1. If the image is light or unclean and untidy printed image - Shake the developer and then recheck. (1)NG: Check the weight of the developer (2)OK: Lack of toner, so the life is nearly closed. 2. Some part of image is not printed - Shake the developer and then recheck. (1)NG: Check the weight of the developer and clean the LSU window with a cotton swab, then recheck. (2)OK: Lack of toner, so the life is nearly closed. 3. Periodically a noise as "tick tick" occurs - Measure the cycle and the weight of the developer. 4. White vertical stripes on the whole screen or partly : Check the weight of the developer.	1. All of 1, 2, 3 above- (1)The weight of the developer ended: 800g ± 20g (2)If it become better by shaking, replace with a new developer after 50-100 sheets in the closing state of the life span. 2. In case of 2- If it becomes better after cleaning the LSU window, then the developer is normal. (Because of foreign substance on the LSU window, the image has not been printed partly.) 3. In case of 3- If the cycle of noise is about 2 seconds, the toner inside the developer has been nearly exhausted.(Purchase and replace with a new developer after using about 200 sheets at the point of occurrence) 4. In case of 3- This is a phenomenon caused by lack of toner, so replace with a new developer.
Toner Contamination	• Toner is fallen on the papers periodically. • Contaminated with toner on prints partly or over the whole surface.	1. Toner is fallen on the paper periodically. (1)Check the cycle of the falling of the toner. (2)Check the appearance of both ends of the developer OPC drum. 2.The center of the printed matter is contaminated with toner. (1)Check whether foreign substances or toner are stuck to the terminal (contact point) of the developer. (2)Check whether the state of the terminal assembly is normal.	1. If both ends of the OPC drum are contaminated with toner: Check the life of the developer. (In case of less than 1000g, the life may be expired.) or check the rate of remain toner if remain toner is below 10% the toner is almost empty. 2. Check whether it could be recycled. 3. If it cannot be recycled: Replace the developer.

Fault	Signs	Cause & Check	Solution
White Black spot	• Light or dark black dots on the image occur periodically. • White spots occur in the image periodically.	1. If light or dark periodical black dots occur, this is because the developer rollers are contaminated with foreign substance or paper particles. (1) 37.7 mm interval : Charged roller (2) 75.5 mm interval : OPC cycle 2. If white spots occur in a black image at intervals of 75mm, or black spots occur elsewhere, the OPC drum is damaged or foreign substance is stuck to the surface. 3. If a black and white or graphic image is partially broken at irregular intervals, the transfer roller's life has been expired or the transfer voltage is abnormal.	1. In case of 1 above - Run OPC Cleaning Mode Print 4-5 times repeatedly to remove. Especially check foreign substance on the OPC surface, then remove them with a clean gauze moistened with IPA(Isopropyl Alcohol) not to damage OPC if necessary. **Never use usual alcohol.** 2. In case of 2 If they are not disappeared by running OPC Cleaning Mode Print 4-5 times. : at intervals of 37.7 mm - Replace the developer. : at intervals of 75.5 mm - Remove foreign substance. : Broken image - Replace the developer according to carelessness. 3. In case of 3 - Exchange the transfer roller because the life of the transfer roller in use has been expired. (Check the transfer voltage and readjust if different.)
Recycled product	• Poor appearance of the developer. • Unclean and rough printouts. • Bad background in the image.	1. Poor appearance of the developer. (1) Check the damage to label and whether different materials are used. (2) Check the appearance of parts of the developer, such as frame, hopper. 2. Unclean and rough printouts. (1) Check whether foreign substance or toner are stuck to the terminal (contact point) of the developer. (2) Check whether the state of the terminal assembly is normal.	1. In case of 1 - (1)If there is an evidence of disassembling the developer. (2)If materials other than normal parts of the developer are added or substituted. 2. In case of 2 - If there are any abnormals in connection with the situation of 1. (1) It occurs when the developer is recycled over 2 times. (2) If toner nearly being expired are collected to use, it is judged as the recycled developer.

Fault	Signs	Cause & Check	Solution
Ghost & Image Contamination	• The printed image is too light or dark, or partially contaminated black. • Totally contaminated black. (Black image printed out) • The density of printouts is too dark and ghost occurs.	1. The printed image is too light or dark, or partially contaminated black. (1)Check whether foreign substance or toner are stuck to the terminal(point of contact) of the developer. (2)Check whether the terminal assembly is normal.	1. All of 1, 2, 3 above (1)Remove toner and foreign substances adhered to the contact point of the developer. (2)The contact point of the unit facing that of the developer also must be cleaned. (3)If the terminal assembly is unsafe: • Fully stick the terminal to or reassemble it after disassembling. • Disassemble the side plate and push the terminal to be stuck, then reassemble it.
		2. Totally contaminated black. (Black image printed out) (1)Check whether foreign substances are stuck to the terminal(point of contact) of the developer and the state of assembly. (Especially check the charged roller terminal.)	2. In case of 2 It is a phenomenon when the OPC drum of the developer is not electrically charged. Clean the terminals of the charged roller, then recheck it.
		3. The printed image is dark and ghost occurs. (1)Check foreign substance attached to the terminal (point of contact) of the developer and the state of assembly. (Especially check the developing roller terminal.)	3. In case of 3 It is a phenomenon as the developing bias voltage of the developer. Clean the terminals of the developing roller, then recheck it.

6.9 Network Problems Troubleshooting

6.9.1 General Problems

Problem	Solution
System does not function with some wrong values entered y mistake while configuring.	Possibly the parameters in PortThru are corrupted.Restart the system and set to factory defaults on the printer front panel or on your computer using SyncThru.
Not able to access from SNMP Manager. SyncThru is unable to automatically detect print servers.	Try pinging from the same system on which SNMP manager is running. If it does not succeed,there must be a problem with network connectivity between the manager and PortThru.If ping succeeds,verify that community names with sufficient permissions have been used.
SyncThru is unable to automatically detect print servers.	Check the environment as described in Auto Detection of Print Server. Check NetWare file server consoles for error messages regarding nodes with conflicting network numbers.
You cannot see any of DHCP server, BOOTP server or RARP server,when you want to set IP address to print server.	On Network Interface in SyncThru,you should set “Static” to “IP Address Assignment Method” in TCP/IP tab.You should set IP address,Subnet Mask and Default Gateway to print server.
Print server does not print using TCP/IP protocol.	1.Check whether TCP/IP protocol is installed in your PC. 2.Check whether your PC is on the same network with print server.
Unable to print in NetWare environment.	Use SyncThru to see if PortThru indicates that queue is serviceable. If not, the login permissions may have changed or the configuration information for queues,printers and print servers may have been changed. Verify using PCONSOLE and NWADMIN that the configuration is correct and check the job queue to see if the print job exists. Check that NetWare is enabled on PortThru.Check that the Check Job every is configured on PortThru.
The status of printer is displayed ‘unknown’ in SyncThru.	1.Check the protocol of your PC and install DLC/LLC or IPX/SPX protocol. 2.Assign IP Address to PortThru using the front panel.
The name of printer is displayed empty while adding a port and the printer doesn’t function.	1.Check the protocol of your PC and install DLC/LLC or IPX/SPX protocol. 2.Assign IP Address to PortThru using the front panel.

6.9.2 Macintosh Problems

Problem	Solution
The printer name is not displayed in the Chooser.	1.Make sure the printer is connected to network correctly. 2.Make sure the printer is configured in SyncThru using the new name. 3.After turning on the printer,wait 3 minutes,then check it again. 4.Make sure that your Macintosh is connected to the network through Ethernet. 5.When the Macintosh and network printer are in the same network, check above items again.Otherwise check whether the router can support AppleTalk protocol.If the router can not support the AppleTalk protocol,then ask the network manager to solve this problem.
The printer drops letters.	1.Make sure the PS option is installed in your printer correctly. 2.Make sure the SIMM provided with PS option is installed correctly. Check that the total memory is 12MB by printing a self-test page.

6.9.3 Windows Problems

Problem	Solution
After installing PortThru,the print server name is not displayed under New Print Server in SyncThru.	1.Verify that the printer power switch is turned on and the 'READY' message is displayed on the printer front panel. 2.Verify that the LAN cable is plugged into the PortThru card. 3.Verify that the second LED on the PortThru card blinks. •If the second LED blinks regularly,turn off the printer, then turn it back on. If the problem continues,contact your local dealer. •If the first LED on the PortThru card does not blink, check that the card is installed snugly. If the problem continues, contact your local dealer. 4.Confirm whether the print server and the PC which searches for the New Print Server is on the same LAN. If you want to search for a New Print Server,your PC and the print server should be on the same LAN.
The print server name is displayed, but the test page is not printed.	Select the Network menu from the front panel menus. Check that the test page is printed. If the Network menu is not displayed,or the test page is not printed, turn off the printer, then turn it back on.
Firmware upgrade process is completed. But upgrading is not executed.	An IP address should be assigned to upgrade the Firmware. Make sure that IP address is entered in Print Server. If an IP address is not entered,reassign it and try again.

Problem	Solution
SyncThru is unable to automatically detect printers.	1.Check LAN cable is connected to the printers. •Check LAN cable is connected to the printers yourself. •Make sure that there are the connected printers shown in network neighborhood.If not, check the communication status of the printers. •If IP address is assigned to the computers, try ping command. 2.If the protocols of NPC are disabled, DLC/LLC should be installed in the computers. •If SyncThru is unable to detect printers with DLC/LLC installed in the computers, check whether NPC and PC are on the same LAN. •If LAN is connected by routers, SyncThru is unable to detect the printers. 3.If more than one of the protocols of NPC are enabled and DLC/LLC is installed in the computers, check NPC and PC are on the same LAN. •If LAN is connected by routers, SyncThru is unable to detect the printers. In this case, one of protocols which are enabled in NPC should be Installed in the computers. 4.In case that the protocol which is enabled in NPC is installed in the computers: •If TCP/IP installed, check entry values of IP address, subnet mask and default gateway.
The printer does not print.	Try Add a Port.

6.9.4 SyncThru Installation Problems

Problem	Solution
”File Transfer Error” message appears when you execute Installation.	1.Make sure the previously installed SyncThru is uninstalled. 2.If the SyncThru is uninstalled,restart your PC. 3.If the problem continues, In Windows 95/98,delete the “sammon.dll” file in the system directory of Windows in MS-DOS mode, restart Windows and reinstall it. In Windows NT, stop the spooler service with’ Services ’in Control Panel, delete the “sammon.dll” file in the system32 directory of Windows NT, start spooler service and reinstall it.
‘Unable to add the Port list of Samsung ports’ message appears, when you add a port.	Verify that your PC restarts after installing SyncThru.

7. Exploded Views and Parts List

Contents

7.1 Main Exploded Views 7-2
7.2 Cover Ass'y 7-4
7.3 Middle Cover Ass'y 7-6
7.4 Front Cover Ass'y 7-8
7.5 Rear Cover Ass'y 7-10
7.6 Frame Assembly 7-12
7.7 Fuser Drive Ass'y 7-16
7.8 Main Drive Ass'y 7-18
7.9 MP Ass'y 7-20
7.10 Scan Ass'y 7-22
7.11 Platen Ass'y 7-24
7.12 Cover Platen Ass'y 7-26
7.13 ADF Ass'y 7-28
7.14 OPE Unit 7-31
7.15 Cassette Ass'y 7-33
7.16 Fuser Ass'y 7-35
7.17 Duplex Unit(Optional) 7-37

DIGITAL LASER MFP

The keynote of Product

[Key Features]

- 28 ppm Print speed/20 cpm Copy Speed (Printing Speed: A4/28ppm,Letter/30ppm)
- 1200 dpi Print Resolution (Addressable)
- PCL6, PS3(SCX-5530FN)
- CPU: Chorusm
- Network Solution: Scan-to-Email, Scan-to-SMB, Scan-to-FTP
- 64MB System Memory/32MB DIMM(5530FN)
- 50 ADF / MP 50 Sheet
- 250 sh Paper Input / 150 sh Paper Output
- 33.6 Kbps Fax Modem (5530FN only)
- Duplex Print (5530FN only)
- Direct USB Connectivity 2nd Version (PDF Direct Printing) (5530FN only)
- Small Foot Print
- Toner: 4K(Initial)/ 8K(sales)

7.1 Main Exploded Views

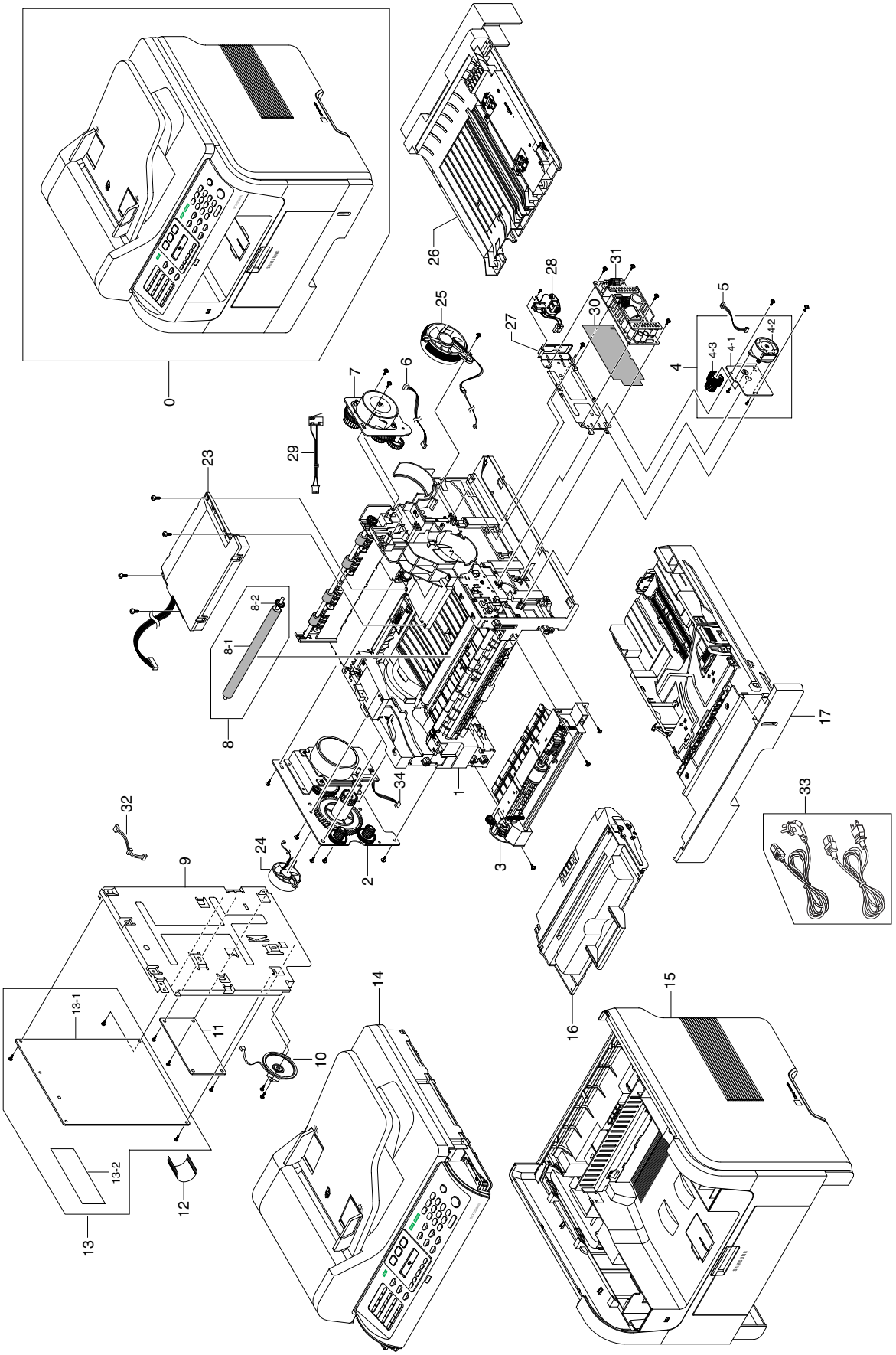

Main Parts List

SA : SERVICE AVAILABLE, SNA : SERVICE not AVAILABLE

Drawer#	SEC_Code	Description	QT'y	Service
7.1-0	-	SET		
7.1-1	JC96-03790A	ELA HOU-FRAME 110V	1	SA
7.1-1	JC96-03789A	ELA HOU-FRAME 220V	1	SA
7.1-2	JC96-03761A	ELA UNIT-MAIN DRIVE	1	SNA
7.1-3	JC96-03837A	ELA HOU-MPF	1	SA
7.1-4	JC96-03762A	ELA UNIT-DUPLEX DRIVE	1	SA
7.1-4-1	JC61-01599A	BRACKET-P-GEAR DUP	1	SNA
7.1-4-2	JC31-00048A	MOTOR STEP-DUPLEX	1	SA
7.1-4-3	JC66-01159A	GEAR-DUP RDCN 45/19	1	SNA
7.1-5	JC39-00530A	CBF HARNESS-DPX MTR	1	SA
7.1-6	JC39-00538A	CBF HARNESS-ADF CLUT1	1	SA
7.1-7	JC96-03866A	ELA HOU-FUSER DRIVE	1	SA
7.1-8	JC97-02652A	MEA-TRANSFER ROLLER	1	SA
7.1-8-1	JC66-01181A	ROLLER-TRANSFER	1	SA
7.1-8-2	JC66-00395A	GEAR-TRANSFER	1	SA
7.1-9	JC63-00912A	SHIELD-P-CONTROLLER	1	SA
7.1-10	3001-001293	SPEAKER	1	SA
7.1-11	JC92-01746A	PBA SUB-MODEM	1	SA
7.1-12	JC39-00518A	CBF HARNESS-ENGINE	1	SA
7.1-13	JC96-03970A	ELA HOU-MAIN RAM DIMM	1	SA
7.1-13-1	JC92-01743A	PBA MAIN-CONTROLLER	1	SA
7.1-13-2	JC92-01836A	PBA SUB-SDRAM	1	SA
7.1-14	JC96-03773A	ELA HOU-ADF	1	SA
7.1-15	JC97-02391A	MEA-COVER	1	SNA
7.1-16	JC96-03795A	ELA UNIT-DEVE INITIAL	1	SNA
7.1-17	JC97-02413A	MEA UNIT-CASSETTE	1	SA
7.1-23	JC59-00027A	UNIT-LSU	1	SA
7.1-24	JC31-00025A	FAN-DC	1	SA
7.1-25	JC31-00025B	FAN-DC	1	SA
7.1-26	JC97-02393A	MEA UNIT-DUPLEX	1	SA
7.1-27	JC63-00913A	SHIELD-P-SMPS	1	SNA
7.1-28	JC39-00523A	CBF HARNESS-AC INLET	1	SA
7.1-29	JC39-00524A	CBF HARNESS-LSU S/W	1	SA
7.1-30	JC63-00960A	SHEET-INSULATOR_SMPS	1	SNA
7.1-31	JC44-00097A	SMPS-PSP_TYPE3_V1	1	SA
7.1-31	JC44-00090A	SMPS-PSP_TYPE3_V2C	1	SA
7.1-32	JC39-00528A	CBF HARNESS-PAPER EMP	1	SA
7.1-33	-	CBF-POWER CORD	1	SA
Replacement	-	BOX(P)-MAIN	1	SA

7.2 Cover Ass'y

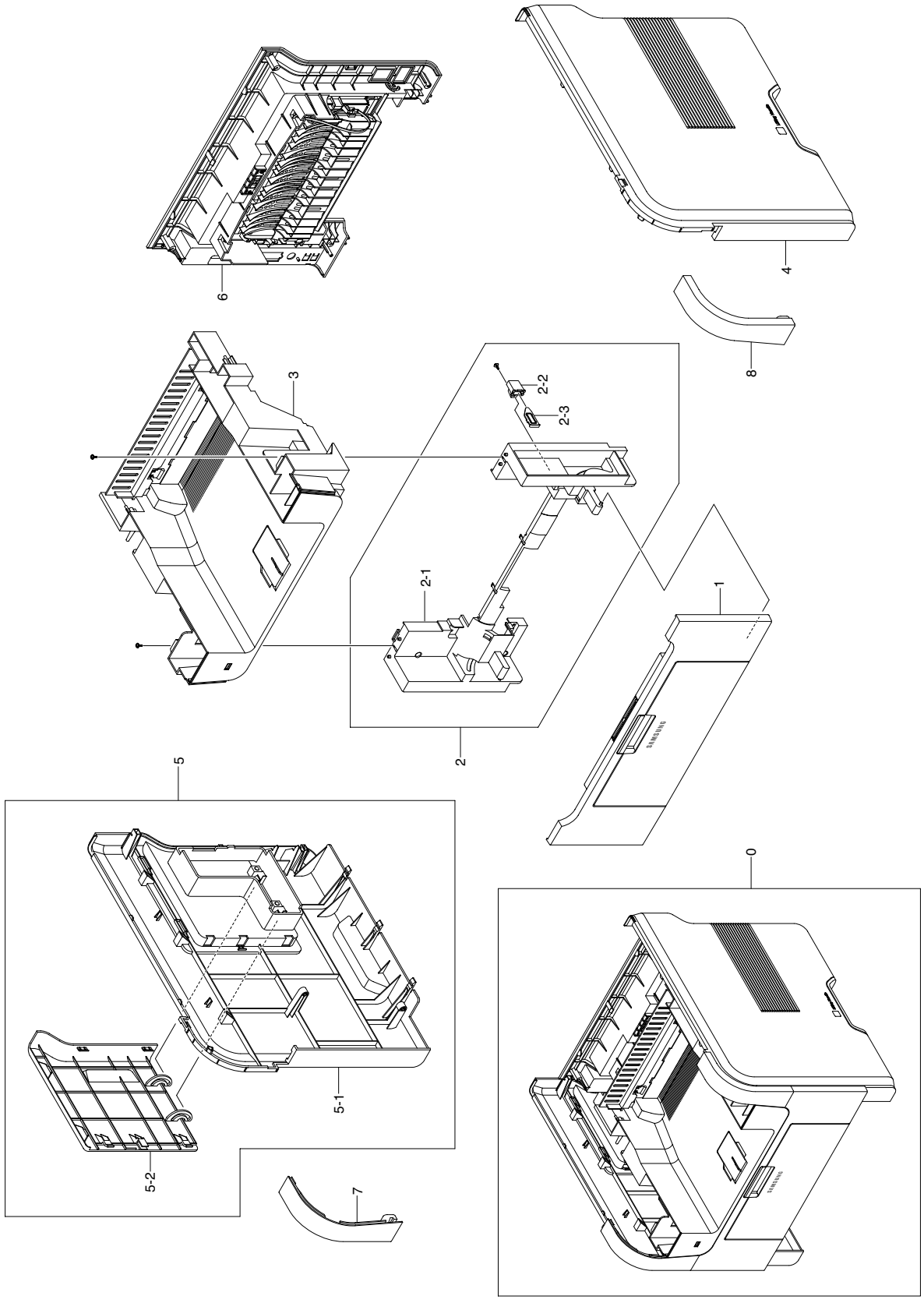

Cover Ass'y Parts List

SA : SERVICE AVAILABLE, SNA : SERVICE not AVAILABLE

Drawer#	SEC_Code	Description	QT'y	Service
7.2-0	JC97-02391A	MEA-COVER	1	SNA
7.2-1	JC97-02420A	MEA-COVER FRONT	1	SA
7.2-2	JC97-02419A	MEA-COVER MID FRONT	1	SA
7.2-2-1	JC63-00935A	COVER-M_MID FRONT	1	SNA
7.2-2-2	JC67-00068C	CAP-M_SUB ACTUATOR	1	SNA
7.2-2-3	JC72-01339A	PMO-M-SUB ACTUATOR	1	SNA
7.2-3	JC96-03793A	ELA HOU-COVER MID	1	SA
7.2-4	JC63-00928A	COVER-M_SIDE R	1	SA
7.2-5	JC97-02417A	MEA-COVER SIDE L	1	SA
7.2-5-1	JC63-00929A	COVER-M_SIDE L	1	SNA
7.2-5-2	JC63-00930A	COVER-M_DIMM	1	SNA
7.2-6	JC97-02418A	MEA-COVER REAR	1	SA
7.2-7	JC63-00934A	COVER-M_LEFT UPPER	1	SA
7.2-8	JC63-00933A	COVER-M_RIGHT UPPER	1	SA

7.3 Middle Cover Ass'y

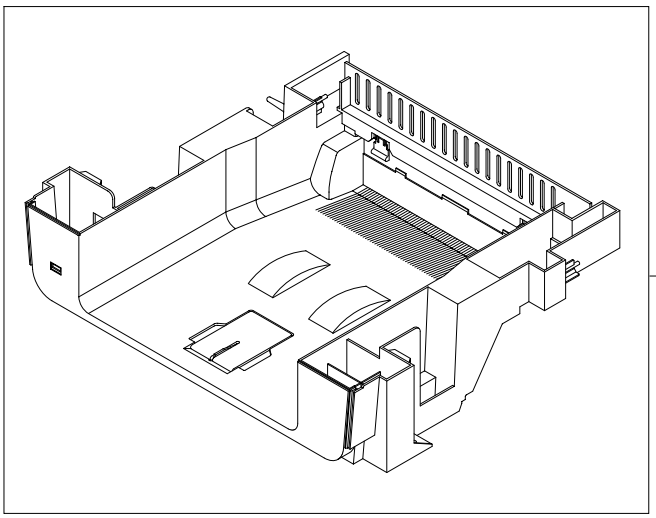

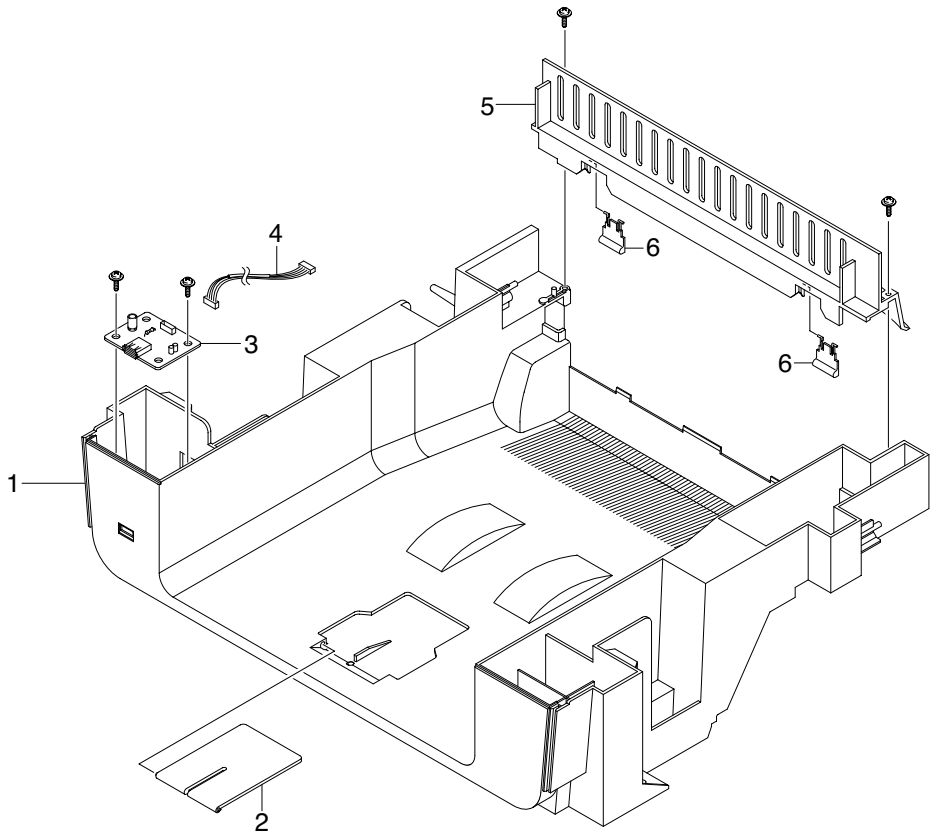

Middle Cover Ass'y Parts List

SA : SERVICE AVAILABLE, SNA : SERVICE not AVAILABLE

Drawer#	SEC_Code	Description	QT'y	Service
7.3-0	JC96-03793A	ELA HOU-COVER MID	1	SA
7.3-1	JC63-00927A	COVER-M_MIDDLE	1	SA
7.3-2	JC63-00944A	COVER-M_STACKER RX	1	SA
7.3-3	JC92-01636A	PBA SUB-USB HOST	1	SA
7.3-4	JC39-00397A	CBF HARNESS-USB HOST	1	SA
7.3-5	JC63-00938A	COVER-M_REAR UPPER	1	SA
7.3-6	JC72-01001A	PMO-SUB STACKER	2	SA

7.4 Front Cover Ass'y

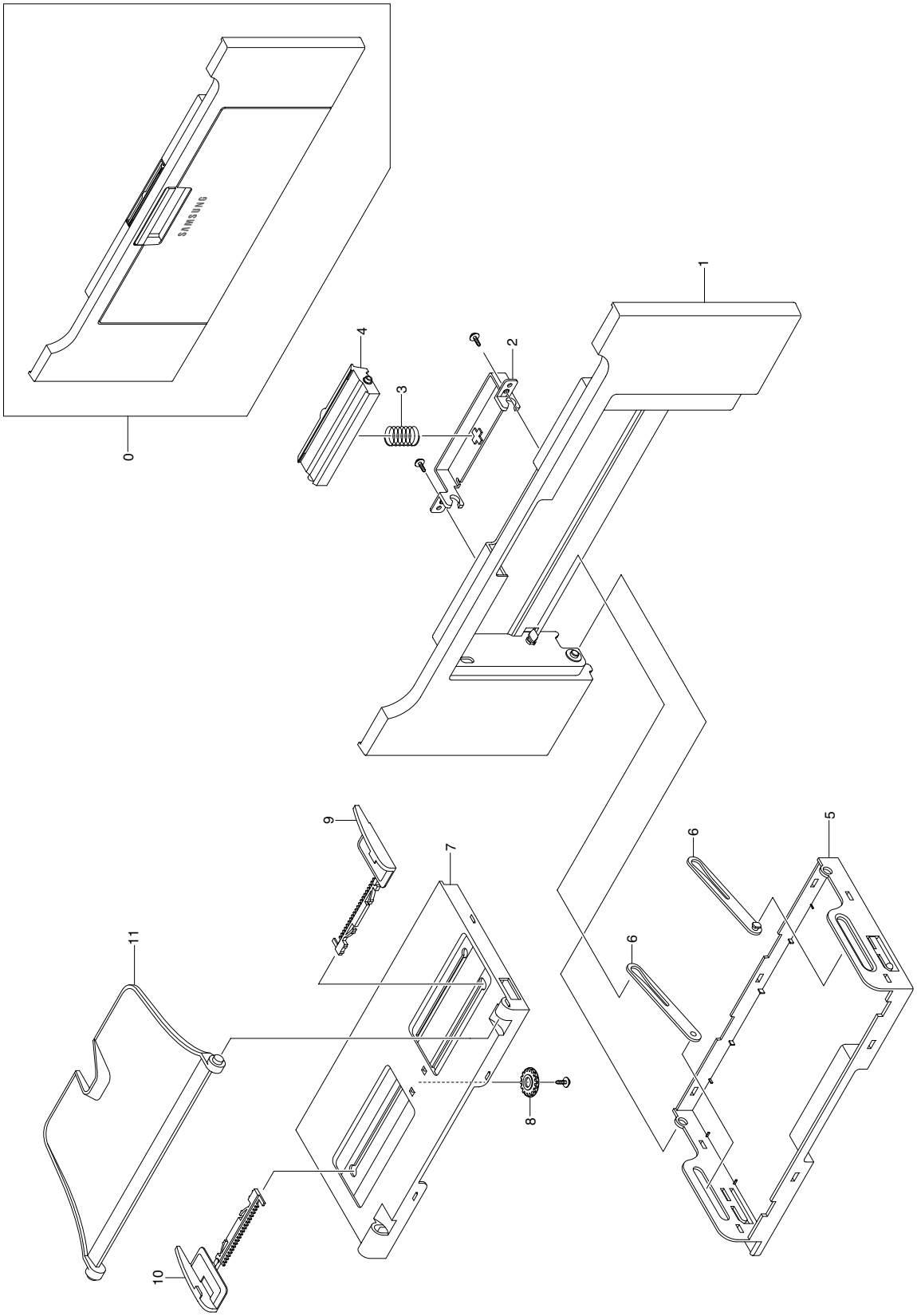

Front Cover Ass'y Parts List

SA : SERVICE AVAILABLE, SNA : SERVICE not AVAILABLE

Drawer#	SEC_Code	Description	QT'y	Service
7.4-0	JC97-02420A	MEA-COVER FRONT	1	SA
7.4-1	JC63-00932A	COVER-M_FRONT	1	SNA
7.4-2	JC61-00953D	HOLDER-M_LOCKER	1	SA
7.4-3	JG61-70549A	SPRING ETC-CIS(C2)	1	SA
7.4-4	JC64-00154C	KNOB-M_LOCKER	1	SA
7.4-5	JC63-00447E	TRAY-M-ASF_FOLDER	1	SA
7.4-6	JC63-00444A	TRAY-M-LINK_MP	2	SA
7.4-7	JC63-00945A	TRAY-M-ASF_INPUT	1	SNA
7.4-8	JG66-40003A	GEAR-PINION	1	SA
7.4-9	JC70-00479D	ADJUST-M_MP R	1	SNA
7.4-10	JC70-00478D	ADJUST-M_MP L	1	SNA
7.4-11	JC63-00446E	TRAY-M-ASF_INPUT UPPER	1	SA

7.5 Rear Cover Ass'y

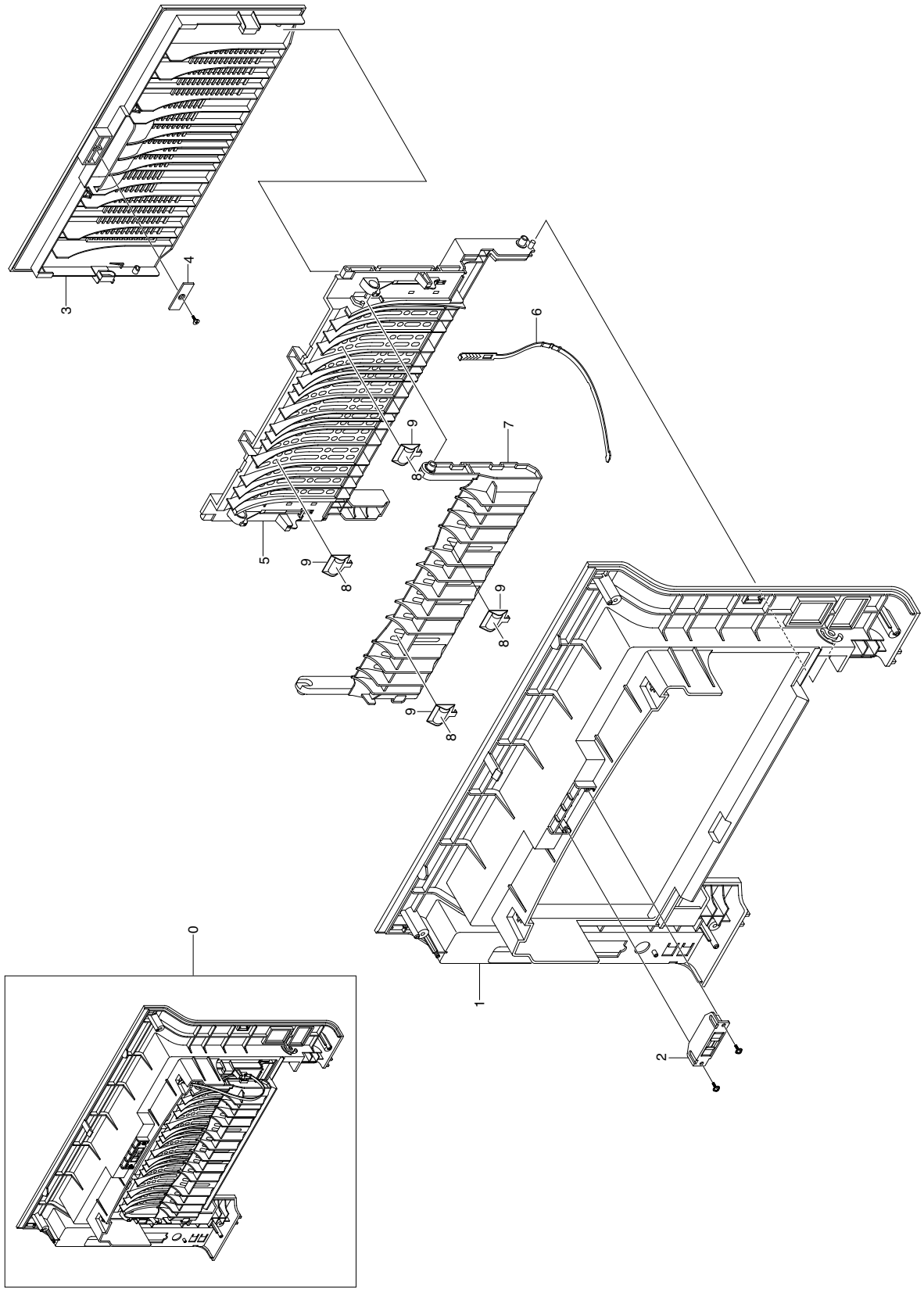

Rear Cover Ass'y Parts List

SA : SERVICE AVAILABLE, SNA : SERVICE not AVAILABLE

Drawer#	SEC_Code	Description	QT'y	Service
7.5-0	JC97-02418A	MEA-COVER REAR	1	SA
7.5-1	JC63-00931A	COVER-M_REAR	1	SNA
7.5-2	JC61-00961A	MAGNET-CATCH DELL	1	SNA
7.5-3	JC63-00936A	COVER-M_FACE UP	1	SNA
7.5-4	JC61-00962A	PLATE-MAGNET CATCH	1	SNA
7.5-5	JC63-00937A	COVER-M STACKER REAR	1	SNA
7.5-6	JC61-01653A	STOPPER-M-STRAP	1	SNA
7.5-7	JC61-01583A	GUIDE-OUTPUT FUSER	1	SNA
7.5-8	JC61-00785A	HOLDER-M-IDLE ROLLER	4	SNA
7.5-9	JC72-40981A	PMO-ROLLER UPPER DP	4	SNA

7.6 Frame Assembly

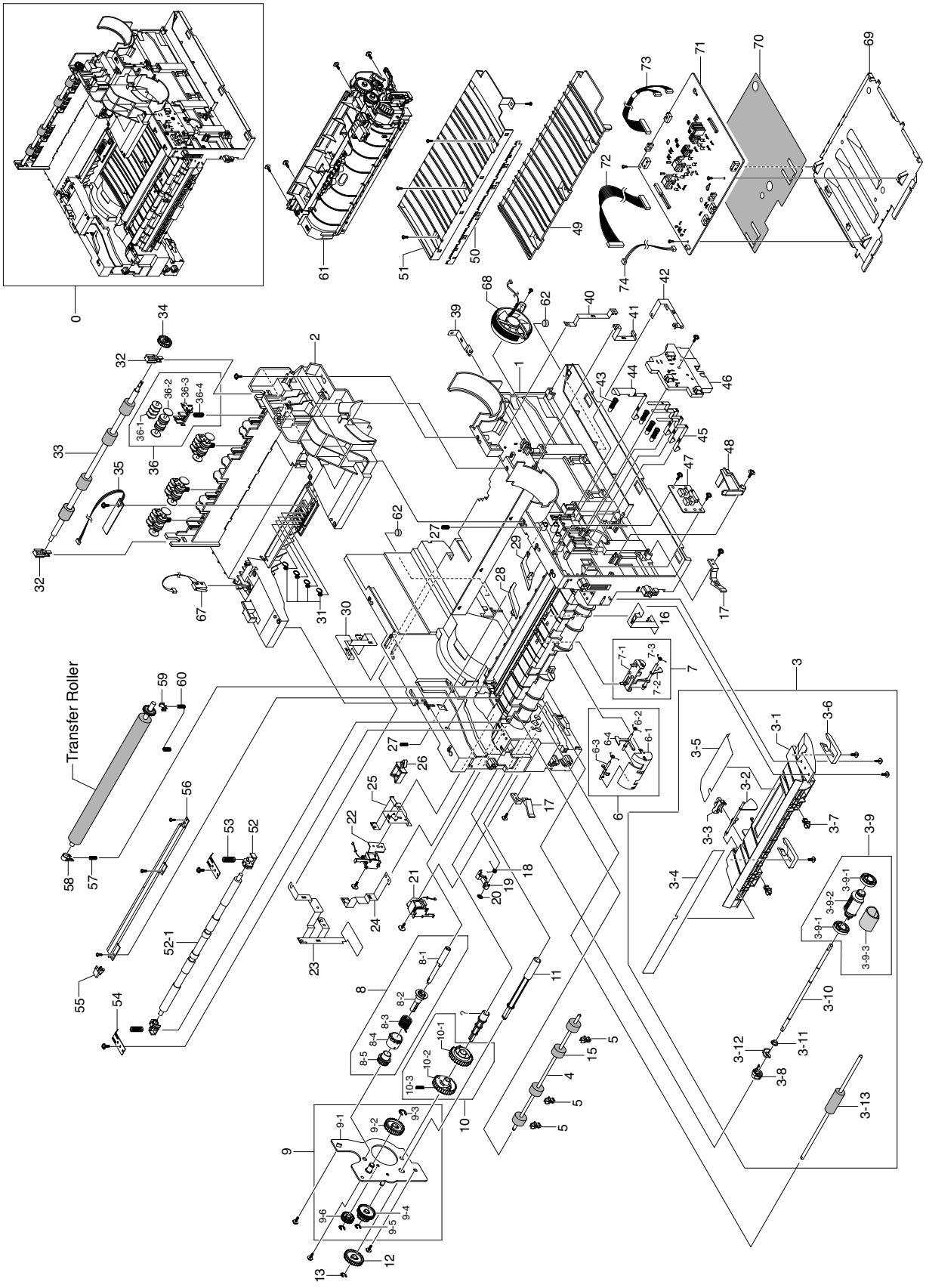

Frame Assembly Parts List

SA : SERVICE AVAILABLE, SNA : SERVICE not AVAILABLE

Drawer#	SEC_Code	Description	QT'y	Service
7.6-0	JC96-03790A	ELA HOU-FRAME 110V	1	SA
7.6-0	JC96-03789A	ELA HOU-FRAME 220V	1	SA
7.6-1	JC61-01620A	FRAME-M_BASE	1	SNA
7.6-2	JC61-01621A	FRAME-M_EXIT	1	SNA
7.6-3	JC96-03829A	ELA HOU-GUIDE DUP F	1	SA
7.6-3-1	JC61-01600A	GUIDE-M_FRONT DUPLEX	1	SNA
7.6-3-2	JC66-01187A	LEVER-ACTUATOR EMPTY	1	SA
7.6-3-3	0604-001154	PHOTO-INTERRUPTER	1	SA
7.6-3-4	JC63-01095A	SHEET-GUIDE DUP_OUT	1	SNA
7.6-3-5	JC63-00992A	SHEET-GUIDE FRONT DU	1	SNA
7.6-3-6	JC66-01170A	CAM-SHAFT PICK UP	2	SNA
7.6-3-7	JC72-00382B	PMO-BUSHING FEED	2	SA
7.6-3-8	JC61-01367A	FIXER-M_E RING 4PI	1	SNA
7.6-3-9	JC97-02441A	MEA-ROLLER PICK UP	1	SA
7.6-3-9-1	JC66-01169A	ROLLER-IDLE PICK UP	2	SA
7.6-3-9-2	JC61-01601A	HOUSING-M_PICK UP	1	SA
7.6-3-9-3	JC66-01168A	ROLLER-PICK UP	1	SA
7.6-3-10	JC66-01171A	SHAFT-PICK UP	1	SNA
7.6-3-11	JC72-41364A	PMO-BUSHING_P/U,MP	1	SA
7.6-3-12	JC66-00050A	CAM-CATCH	1	SA
7.6-3-13	JC66-01173A	ROLLER-FEED	1	SA
7.6-4	JC66-00527A	SHAFT-FEED IDLE	1	SA
7.6-5	JC61-00585A	BUSH-M-FEED IDLE	3	SA
7.6-6	Not ssign	FEED1 ASS'Y	1	SNA
7.6-6-1	JC61-01619A	HOLDER-M_ACT REGI	1	SA
7.6-6-2	6107-001164	SPRING-TS	2	SA
7.6-6-3	JC66-01189A	LEVER-M_ACTUATOR FEED	1	SA
7.6-6-4	JC66-01191A	LEVER-M_ACTUATOR REGI	1	SA
7.6-7	Not ssign	FEED2 ASS'Y	1	SNA
7.6-7-1	JC61-01618A	HOLDER-M_ACT FEED	1	SA
7.6-7-2	JC66-01190A	LEVER-M_ACT DUP OUT	1	SA
7.6-7-3	6107-001164	SPRING-TS	1	SA
7.6-8	JC97-01788A	MEA UNIT-CLUTCH	1	SA
7.6-8-1	JC66-00398A	SHAFT-FEED	1	SA
7.6-8-2	JC72-00981A	PMO-HUB CLUTCH	1	SNA
7.6-8-3	6107-001171	SPRING-TS	1	SA
7.6-8-3	6107-001156	SPRING-TS	1	SA
7.6-8-4	JC72-00978A	PMO-COLLAR_SPRING	1	SA
7.6-8-5	JC66-00393A	GEAR-FEED 1	1	SA
7.6-9	JC97-02394A	MEA UNIT-BRACKET FEED	1	SNA
7.6-9-1	JC61-01582A	BRACKET-P-FEED	1	SNA
7.6-9-2	JC66-01166A	GEAR-IDLE Z29 HELICAL	1	SNA
7.6-9-3	6044-000231	RING-E	1	SA
7.6-9-4	JC66-01164A	GEAR-RETARD 39/19	1	SNA

Frame Assembly Parts List

SA : SERVICE AVAILABLE, SNA : SERVICE not AVAILABLE

Drawer#	SEC_Code	Description	QT'y	Service
7.6-9-5	6044-000125	RING-E	2	SA
7.6-9-6	JC66-00484A	GEAR-T2 IDEL_Z27	1	SA
7.6-10	JC97-02648A	MEA UNIT-GEAR PICK UP	1	SA
7.6-10-1	JC66-01183A	GEAR-PICK UP_INNER	1	SNA
7.6-10-2	JC66-01184A	GEAR-PICK UP_OUTER	1	SA
7.6-10-3	6107-001167	SPRING-CS	1	SNA
7.6-11	JC66-01160A	SHAFT-M_FEED2	1	SNA
7.6-12	JC66-01165A	GEAR-FEED2 Z27	1	SNA
7.6-13	6107-001237	SPRING-ES	1	SNA
7.6-15	JC66-00526A	ROLLER-FEED ROLLER 1	1	SA
7.6-16	JC63-00918A	GROUND-P-EARTH TR	1	SNA
7.6-17	JC72-00983A	PMO-LOCKER CST	2	SA
7.6-18	6107-001170	SPRING-TS	1	SA
7.6-19	JC66-00377A	CAM-M-PICK_UP	1	SA
7.6-20	6044-000001	RING-CS	1	SNA
7.6-21	JC33-00010A	SOLENOID-HB (MANUAL)	1	SA
7.6-22	JC33-00014A	SOLENOID-FEED ROCKY2	1	SA
7.6-23	JC63-00917A	GROUND-P-DRIVE	1	SNA
7.6-24	JC63-00923A	GROUND-P-PUSH BUSHING	1	SNA
7.6-25	JC63-00922A	GROUND-P-DRIVE2	1	SNA
7.6-26	6502-001093	CABLE CLAMP	1	SNA
7.6-27	JC61-70932A	SPRING ETC-GUIDE DEVE	1	SA
7.6-28	JC72-00984A	PMO-PLATE GUIDE DEVE_L	1	SA
7.6-29	JC72-00985A	PMO-PLATE GUIDE DEVE_R	1	SA
7.6-30	JC63-00926A	GROUND-P-SHIELD	1	SNA
7.6-31	JC65-00019A	TERMINAL-P_CRUM	4	SA
7.6-32	JC61-00829A	HOLDER-BEARING EXIT F/DOWN	2	SA
7.6-33	JC97-01034A	MEA RACK-EXIT ROLLER	1	SA
7.6-34	JC66-01196A	ROLLER-EXIT F/DOWN	1	SNA
7.6-35	JC92-01829A	PBA SUB-TERMINAL	1	SA
7.6-36	JC97-01034A	MEA RACK-EXIT ROLLER	4	SA
7.6-36-1	JC72-41007A	PMO-ROLLER FD F	1	SNA
7.6-36-2	JC72-41008A	PMO-ROLLER FD R	1	SNA
7.6-36-3	JC72-41006A	PMO-HOLDER EXIT ROLL	1	SNA
7.6-36-4	JC61-70911A	SPRING ETC-EXIT ROLL FD	1	SNA
7.6-39	JC63-00920A	GROUND-P-FUSER	1	SNA
7.6-40	JC63-00925A	GROUND-P-MOTOR FUSER	1	SNA
7.6-41	JC63-00924A	GROUND-P-SHIELD SMPS	1	SNA
7.6-42	JC63-00921A	GROUND-P-GUIDE TR	1	SNA
7.6-43	JC75-00049A	MEC-TERMINAL	4	SA
7.6-43-1	JC61-00035A	SPRING ETC-HV APOLLO	1	SNA
7.6-43-2	JC70-00050A	IPR-TERMINAL	1	SNA
7.6-44	JC65-00014A	TERMINAL-P-HV CR	1	SNA
7.6-45	JC70-00312A	IPR-P-TERMINAL CON	4	SA

Frame Assembly Parts List

SA : SERVICE AVAILABLE, SNA : SERVICE not AVAILABLE

Drawer#	SEC_Code	Description	QT'y	Service
7.6-46	JC61-01584A	HOUSING-M_TERMINAL	1	SNA
7.6-47	JC92-01828A	PBA SUB-CONNECTION	1	SA
7.6-48	JC72-00974A	PMO-ACTUATOR CVR OPEN	1	SA
7.6-49	JC61-01746A	GUIDE-TR RIB	1	SNA
7.6-50	JC61-00604B	PLATE-E_SAW	1	SA
7.6-51	JC61-00607A	GUIDE-P-TR	1	SA
7.6-52	JC61-00585A	BUSH-M-FEED IDLE	2	SNA
7.6-52-1	JC66-00527A	SHAFT-FEED IDLE	1	SNA
7.6-53	JC61-70958A	SPRING ETC-TR	2	SNA
7.6-54	JC61-00914A	PLATE-P-PUSH BUSHING	2	SA
7.6-53	JC61-70958A	SPRING ETC-TR	1	SA
7.6-54	JC61-00914A	PLATE-P-PUSH BUSHING	1	SNA
7.6-55	JC61-00907A	HOLDER-M-PTL R2	1	SA
7.6-56	JC70-00307A	IPR-P-EARTH TRANSFER	1	SA
7.6-57	JC61-00047A	SPRING ETC-TR L HAWK	1	SA
7.6-58	JC61-00588A	BUSH-M-TR L	1	SA
7.6-59	JC72-00102A	PMO-BUSHING_TR(L)	1	SA
7.6-60	JC63-00918A	GROUND-P-EARTH TR	1	SNA
7.6-61	JC96-03790A	ELA HOU-FRAME 110V	1	SA
7.6-61	JC96-03789A	ELA HOU-FRAME 220V	1	SA
7.6-62	JC61-00835A	FOOT-BACK	2	SA
7.6-67	JC61-01618A	HOLDER-M_ACT FEED	1	SNA
7.6-68	JC31-00025A	FAN-DC	1	SA
7.6-69	JC63-00914A	SHIELD-P-HVPS	1	SNA
7.6-70	JC63-00961A	SHEET-INSULATOR_HVPS	1	SNA
7.6-71	JC44-00107A	HVPS-ELBERT	1	SA
7.6-72	JC39-00526A	CBF HARNESS-DUPLEX	1	SA
7.6-73	JC39-00519A	CBF HARNESS-SMPS	1	SA

7.7 Fuser Drive Ass'y

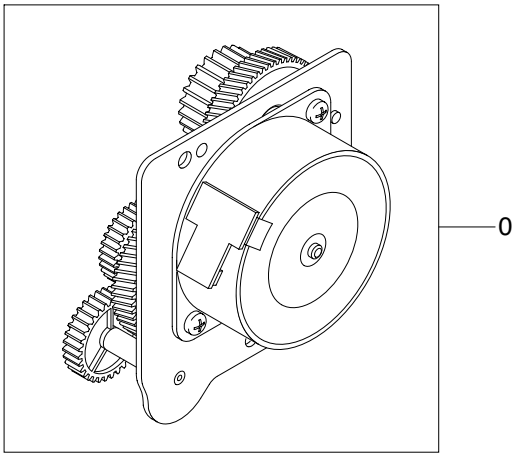

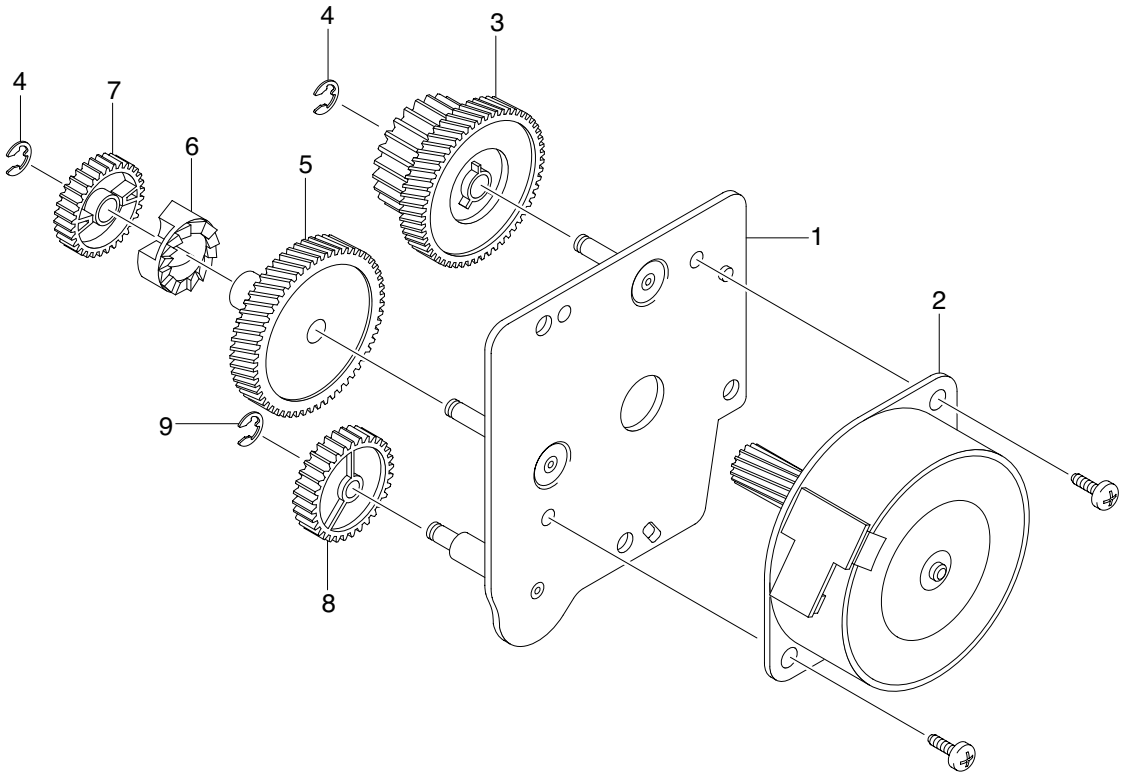

Fuser Drive Ass'y Parts List

SA : SERVICE AVAILABLE, SNA : SERVICE not AVAILABLE

Drawer#	SEC_Code	Description	QT'y	Service
7.3-0	JC96-03793A	ELA HOU-COVER MID	1	SA
7.7-0	JC96-03866A	ELA HOU-FUSER DRIVE	1	SNA
7.7-1	JC61-01598A	BRACKET-P-FUSER EXIT	1	SNA
7.7-2	JC31-00037E	MOTOR STEP-MAIN	1	SA
7.7-3	JC66-01158A	GEAR-EXIT RDCN 87/24	1	SNA
7.7-4	6044-000231	RING-E	2	SA
7.7-5	JC66-01163A	GEAR-FUSER RDCN IN 95	1	SNA
7.7-6	JC66-00340A	GEAR-HUB CLUTCH	1	SA
7.7-7	JC66-00417A	GEAR-RDCN FUSER OUT	1	SA
7.7-8	JC66-01210A	GEAR-FUSER IDLE FR	1	SA
7.7-9	6044-000125	RING-E	1	SA

7.8 Main Drive Ass'y

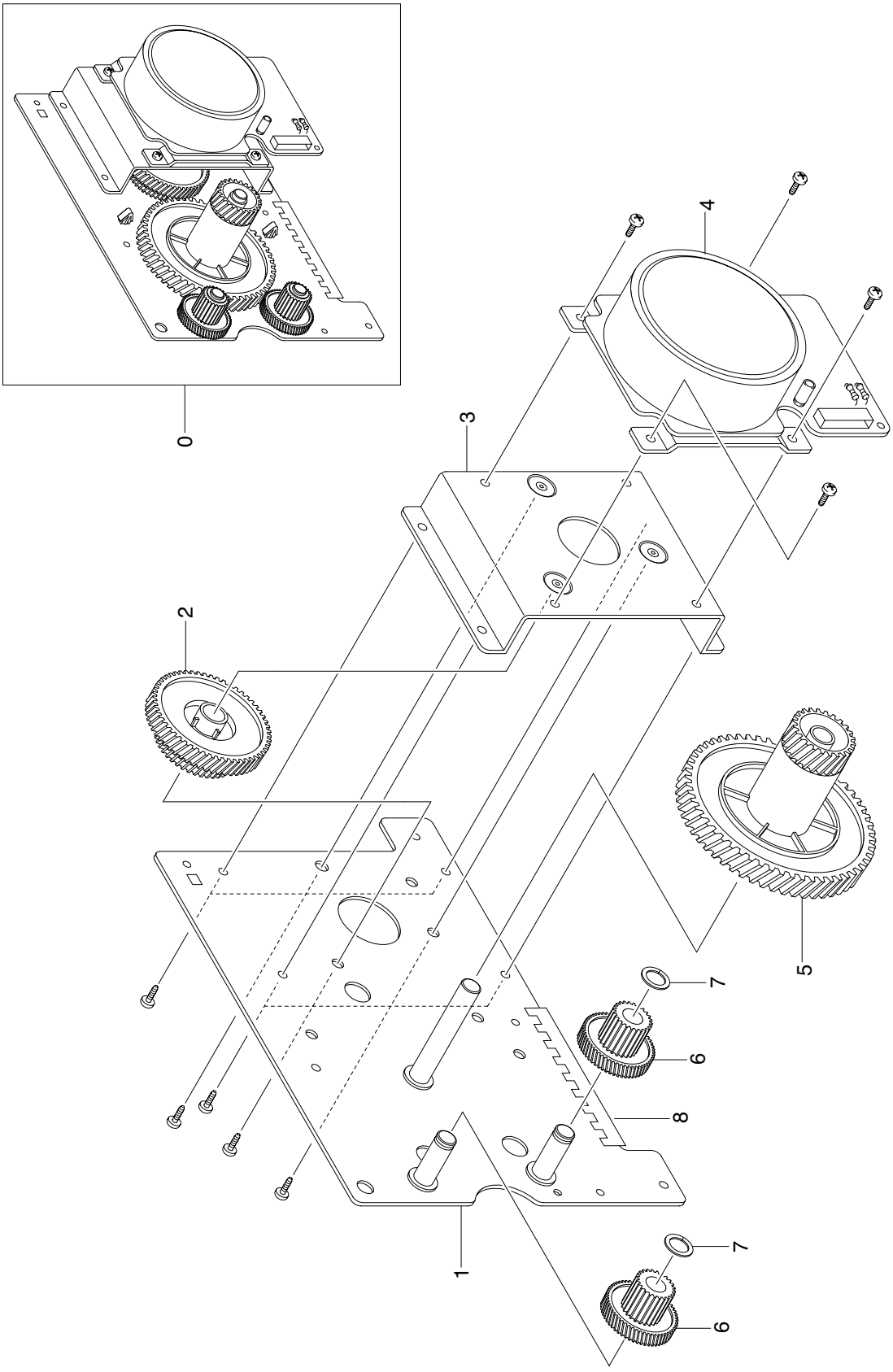

Main Drive Ass'y Parts List

SA : SERVICE AVAILABLE, SNA : SERVICE not AVAILABLE

Drawer#	SEC_Code	Description	QT'y	Service
7.8-0	JC96-03761A	ELA UNIT-MAIN DRIVE	1	SA
7.8-1	JC61-01593A	BRACKET-P-GEAR MAIN	1	SNA
7.8-2	JC66-01156A	GEAR-OPC RDCN 93/61	1	SNA
7.8-3	JC61-01597A	BRACKET-P-MOTOR MAIN	1	SNA
7.8-4	JC31-00047A	MOTOR DC-BLDC MAIN	1	SA
7.8-5	JC66-01157A	GEAR-OPC DRV 113/33	1	SNA
7.8-6	JC66-01162A	GEAR-FEED RDCN 55/18	2	SNA
7.8-7	6031-000023	WASHER-PLAIN	2	SNA
7.8-8	6302-001056	GASKET	1	SNA

7.9 MP Ass'y

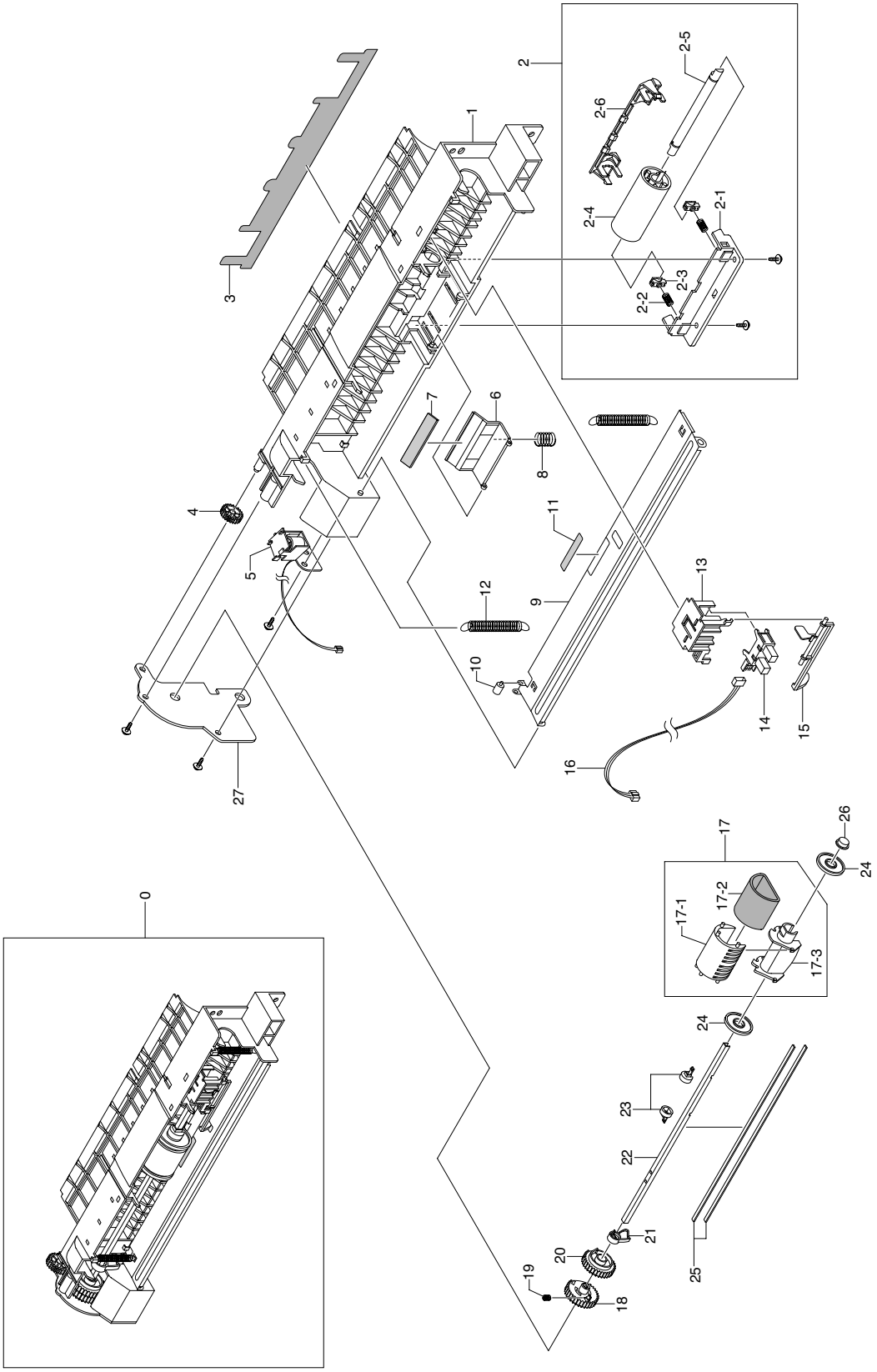
0
1
2
2-1
2-2
2-3
2-4
2-5
2-6
3
4
5
6
7
8
9
10
11
12
13
14
15
16
17
17-1
17-2
17-3
18
19
20
21
22
23
24
25
26
27

MP Ass'y Parts List

SA : SERVICE AVAILABLE, SNA : SERVICE not AVAILABLE

Drawer#	SEC_Code	Description	QT'y	Service
7.9-0	JC96-03837A	ELA HOU-MPF	1	SA
7.9-1	JC61-01603A	FRAME-M_MP	1	SNA
7.9-2	JC97-02443A	MEA-IDLE FEED	1	SNA
7.9-2-1	JC61-01604A	HOLDER-M_IDLE FEED	1	SNA
7.9-2-2	JC61-00484A	SPRING ETC-EXIT LOWER IDLE	1	SA
7.9-2-3	JC61-01605A	HOLDER-M_SHAFT IDLE	1	SNA
7.9-2-4	JC66-01186A	ROLLER-IDLE FEED	1	SNA
7.9-2-5	JC66-01172A	SHAFT-IDLE FEED	1	SNA
7.9-2-6	JC63-00997A	COVER-M_IDLE FEED	1	SNA
7.9-3	JC63-01094A	SHEET-GUIDE MP	1	SA
7.9-4	JC66-00396A	GEAR-IDLE 23	1	SA
7.9-5	JC33-00015A	SOLENOID-MP	1	SA
7.9-6	JC61-00924A	HOLDER-M-PAD_MP	1	SA
7.9-7	JC73-00140A	RPR-FRICTION PAD	1	SA
7.9-8	JC61-70911A	SPRING ETC-EXIT ROLL FD	1	SA
7.9-9	JC61-00927A	PLATE-P-KNOCK UP_MP	1	SNA
7.9-10	JC72-00761A	PMO-ROLLER CAM.MP	1	SA
7.9-11	JC73-00141A	RPR-PAD CASSETTE	1	SA
7.9-12	6107-001237	SPRING-ES	2	SA
7.9-13	JC61-00926A	HOLDER-M-SENSOR_MP	1	SA
7.9-14	0604-001095	PHOTO-INTERRUPTER	1	SA
7.9-15	JC72-01338A	PMO-M-ACT EMPTY MP	1	SA
7.9-16	JC39-00365A	CBF HARNESS-MPF SEN	1	SA
7.9-17	JC97-02034A	MEA-PICK UP_MP	1	SA
7.9-17-1	JC61-00925A	HOUSING-M_PICK UP_MP	1	SA
7.9-17-2	JC73-00194A	RUBBER-PICK UP MP	1	SA
7.9-17-3	JC61-00910A	HOUSING-M-PICK UP2_R2	1	SA
7.9-18	JC66-00710A	GEAR-M-PICK UP_MP	1	SA
7.9-19	JC61-00484A	SPRING ETC-EXIT LOWER IDLE	1	SA
7.9-20	JC66-00709A	GEAR-M-HOLDER_MP	1	SA
7.9-21	JC66-01205A	CAM-M_PICK UP MP	1	SA
7.9-22	JC66-00399A	SHAFT-P-PICK_UP	1	SA
7.9-23	JC61-00915A	STOPPER-M-PICK UP_R2	2	SA
7.9-24	JC72-00982A	PMO-IDLE PICK_UP	2	SA
7.9-25	JC66-00720A	SHAFT-P-CORE	2	SA
7.9-26	JC61-00587A	BUSH-M-PICK_UP R	1	SA
7.9-27	JC61-00932A	BRACKET-P-PICKUP_MP	1	SA

7.10 Scan Ass'y

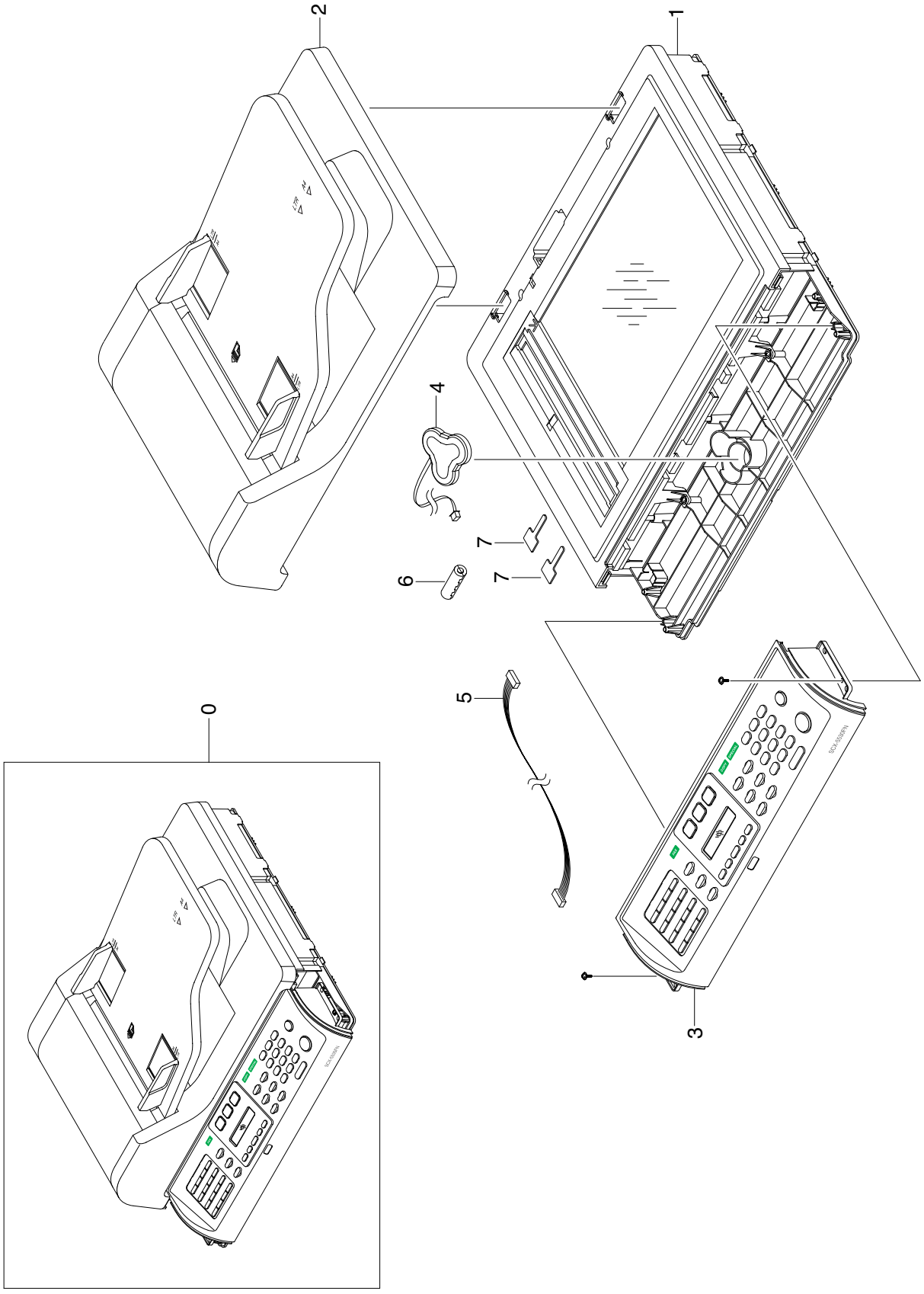

Scan Ass'y Parts List

SA : SERVICE AVAILABLE, SNA : SERVICE not AVAILABLE

Drawer#	SEC_Code	Description	QT'y	Service
7.10-0	JC96-03777K	ELA HOU-SCAN 4IN1	1	SA
7.10-1	JC96-03784A	ELA HOU-ADF LOWER	1	SA
7.10-2	JC96-03773A	ELA HOU-ADF	1	SA
7.10-3	JC96-03787K	ELA HOU-OPE 4IN1	1	SA
7.10-4	4302-001183	BATTERY-NIH(2ND)	1	SA
7.10-5	JC39-00513A	CBF HARNESS-OPE	1	SNA
7.10-6	3301-001635	CORE-FERRITE	1	SNA
7.10-7	6502-000121	CABLE CLAMP	2	SNA

7.11 Platen Ass'y

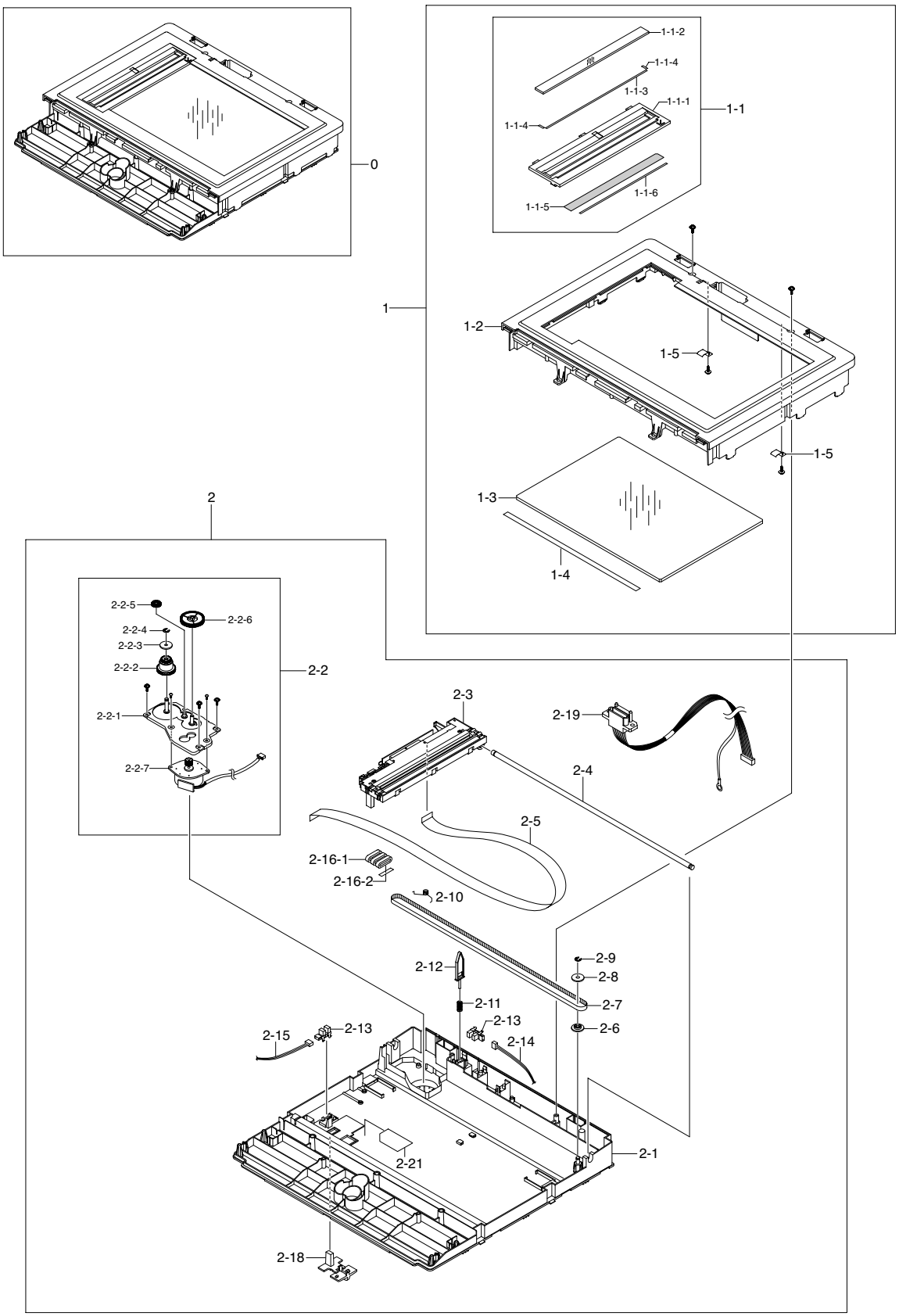

Platen Ass'y Parts List

SA : SERVICE AVAILABLE, SNA : SERVICE not AVAILABLE

Drawer#	SEC_Code	Description	QT'y	Service
7.11-0	JC96-04067A	ELA HOU-PLATEN	1	SA
7.11-1	JC97-02412A	MEA-SCAN UPPER	1	SA
7.11-1-1	JC97-02429A	MEA UNIT-SCAN DUMMY	1	SA
7.11-1-1-1	JC63-00152F	COVER-M_SCAN DUMMY	1	SA
7.11-1-1-2	JC74-00021A	MCT-GLASS ADF	1	SA
7.11-1-1-3	0203-001744	TAPE-DOUBLE FACE	1	SNA
7.11-1-1-4	JC02-00013A	TAPE ETC-DOUBLE TAPE SMALL	2	SNA
7.11-1-1-5	JB68-00644A	LABEL(P)-SHADING	1	SNA
7.11-1-1-6	0203-001266	TAPE-DOUBLE FACE	1	SNA
7.11-1-2	JC63-00990A	COVER-M_SCAN UPPER	1	SNA
7.11-1-3	JC01-00001A	GLASS-SCAN	1	SA
7.11-1-4	0203-001267	TAPE-DOUBLE FACE	1	SNA
7.11-1-5	JB70-00148A	IPR-HOLDER GLASS	2	SA
7.11-2	JC96-04068A	ELA HOU-SCAN LOWER	1	SNA
7.11-2-1	JC63-00989A	COVER-M_SCAN LOWER	1	SNA
7.11-2-2	JC96-03069A	ELA HOU-SCAN MOTOR	1	SA
7.11-2-2-1	JC61-00895A	BRACKET-SCAN MOTOR R2	1	SA
7.11-2-2-2	JC66-00531A	GEAR-TIMING	1	SA
7.11-2-2-3	JB72-00764A	PMO-HOLDER BELT	1	SA
7.11-2-2-4	6044-000125	RING-E	1	SA
7.11-2-2-5	JB66-00083A	GEAR-IDLE	1	SA
7.11-2-2-6	JC66-00530A	GEAR-REDUCTION73/37	1	SA
7.11-2-2-7	JB31-00011A	MOTOR STEP-SCAN	1	SA
7.11-2-3	JC96-03819A	ELA HOU-CCDM_2905	1	SA
7.11-2-4	JB70-00145A	ICT-SHAFT CCD	1	SNA
7.11-2-5	JC39-00514A	CBF SIGNAL-CCD FFC	1	SA
7.11-2-6	JB72-00763A	PMO-PULLEY	1	SA
7.11-2-7	6602-001067	BELT-TIMING GEAR	1	SA
7.11-2-9	6044-000125	RING-E	1	SA
7.11-2-10	JB61-00059A	SPRING ETC-BELT	1	SA
7.11-2-11	6107-001135	SPRING-CS	1	SA
7.11-2-12	JC72-00755A	PMO-LEVER SENSOR	1	SA
7.11-2-13	0604-001095	PHOTO-INTERRUPTER	1	SA
7.11-2-14	JC39-00535A	CBF HARNESS-PLA_COVER	1	SA
7.11-2-15	JC39-00537A	CBF HARNESS-ADF LOWER	1	SA
7.11-2-16-1	3301-001413	CORE-FERRITE	1	SNA
7.11-2-16-2	JB68-00705A	LABEL(R)-DOUBLE CORE	1	SNA
7.11-2-17	JC39-00513A	CBF HARNESS-OPE	1	SA
7.11-2-18	JC61-00894B	HOLDER-M_CCD	1	SA
7.11-2-19	JC39-00536A	CBF HARNESS-ADF UPPER	1	SA

7.12 Cover Platen Ass'y

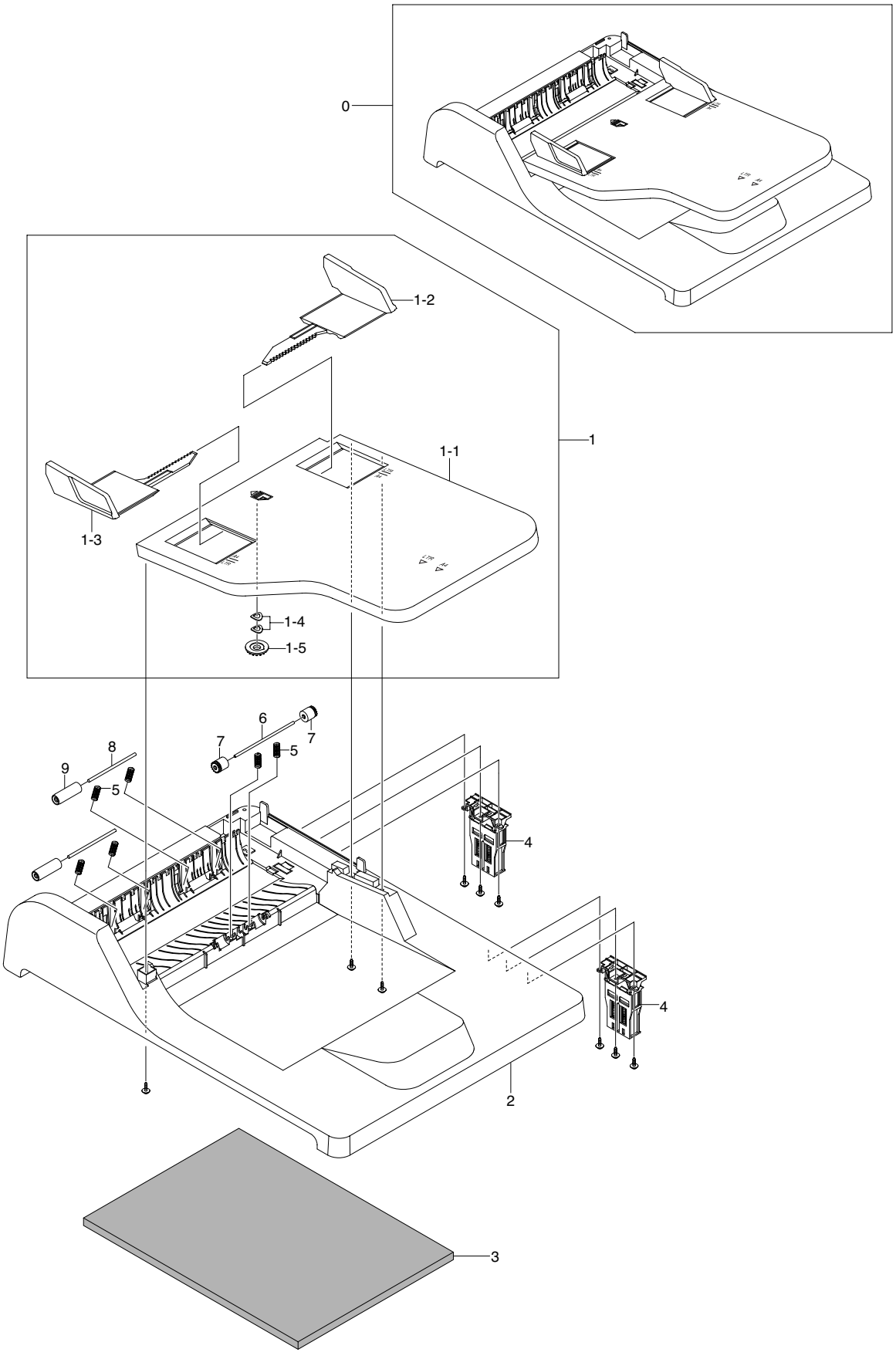

Cover Platen Ass'y Parts List

SA : SERVICE AVAILABLE, SNA : SERVICE not AVAILABLE

Drawer#	SEC_Code	Description	QT'y	Service
7.12-0	JC97-02416A	MEA-COVER PLATEN	1	SA
7.12-1	JC97-02406A	MEA-TX STACKER	1	SA
7.12-1-1	JC63-00988A	COVER-M_STACKER TX	1	SNA
7.12-1-2	JC61-01609A	GUIDE-M_DOCU L	1	SNA
7.12-1-3	JC61-01610A	GUIDE-M_DOCU R	1	SNA
7.12-1-4	JF70-10616A	IPR-WASHER SPRING CU	2	SA
7.12-1-5	JG66-40003A	GEAR-PINION	1	SA
7.12-2	JC63-00984A	COVER-M_PLATEN	1	SNA
7.12-3	JC63-00209A	SHEET-WHITE SPONGE	1	SNA
7.12-4	JC97-01707A	MEA UNIT-HINGE	2	SA
7.12-5	JC61-00011A	SPRING ETC-FEED	6	SA
7.12-6	JF70-40521B	ICT-SHAFT PINCH	1	SA
7.12-7	JG72-40663A	PMO-ROLL PINCH	2	SA
7.12-8	JC66-00909A	SHAFT-IDLE FEED	2	SA
7.12-9	JC66-00728A	ROLLER-ADF FEED	2	SA

7.13 ADF Ass'y

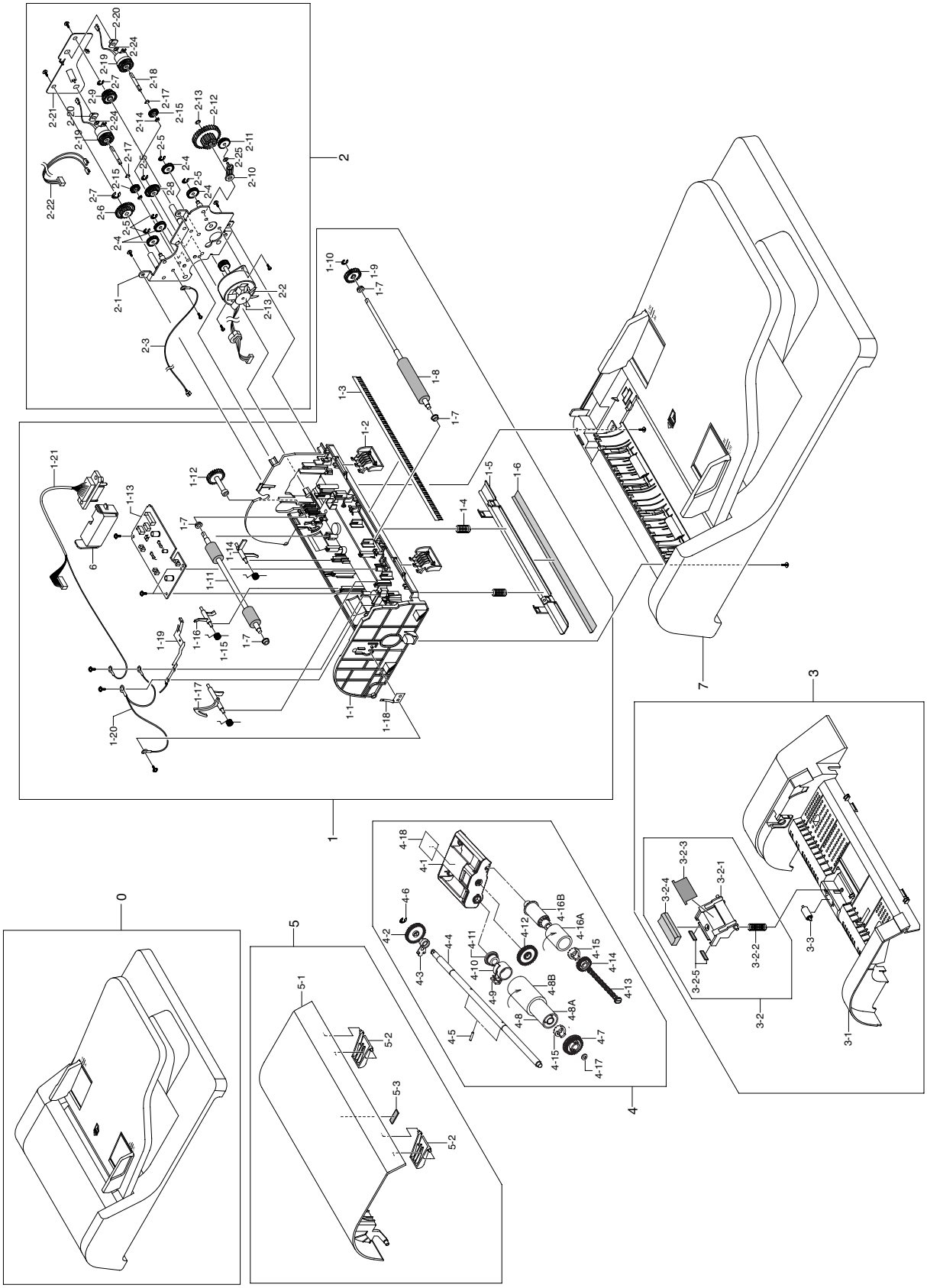
0
1
2
3
4
5
6
7
1-1
1-2
1-3
1-4
1-5
1-6
1-7
1-8
1-9
1-10
1-11
1-12
1-13
1-14
1-15
1-16
1-17
1-18
1-19
1-20
1-21
2-1
2-2
2-3
2-4
2-5
2-6
2-7
2-8
2-9
2-10
2-11
2-12
2-13
2-14
2-15
2-16
2-17
2-18
2-19
2-20
2-21
2-22
2-24
2-25
3-1
3-2
3-2-1
3-2-2
3-2-3
3-2-4
3-2-5
3-3
4-1
4-2
4-3
4-4
4-5
4-6
4-7
4-8
4-8A
4-8B
4-9
4-10
4-11
4-12
4-13
4-14
4-15
4-16A
4-16B
4-17
4-18
5-1
5-2
5-3

ADF Ass'y Parts List

SA : SERVICE AVAILABLE, SNA : SERVICE not AVAILABLE

Drawer#	SEC_Code	Description	QT'y	Service
7.13-0	JC96-03773A	ELA HOU-ADF	1	SA
7.13-1	JC96-03784A	ELA HOU-ADF LOWER	1	SA
7.13-1-1	JC63-00982A	COVER-M_ADF LOWER	1	SNA
7.13-1-2	JC61-00712A	GUIDE-STACKER SUB	2	SA
7.13-1-3	JC75-00095A	MEC-BRUSH ANTISTATIC	1	SA
7.13-1-4	JC61-00548A	SPRING ETC-WHITE BAR	2	SA
7.13-1-5	JC61-01695A	BRACKET-P_WHITE_BAR	1	SA
7.13-1-6	JC72-00752A	PPR-WHITE BAR SHEET	1	SA
7.13-1-7	JB72-00819A	PMO-BUSH	2	SA
7.13-1-8	JC66-00559A	ROLLER-EXIT	1	SA
7.13-1-9	JC66-00310A	GEAR-AGITATOR-2	1	SNA
7.13-1-10	6044-000159	RING-C	1	SA
7.13-1-11	JC66-00560A	ROLLER-DRIVE	1	SA
7.13-1-12	JC66-00460A	SHAFT-M-FEED GEAR 38	1	SA
7.13-1-13	JC92-01755A	PBA SUB-ADF	1	SA
7.13-1-14	JC72-01011A	PMO-ACTUATOR SCAN SENSOR	1	SA
7.13-1-15	JB61-00076A	SPRING ETC-TORSION DOC (CC2-F)	3	SA
7.13-1-16	JC72-01010A	PMO-ACTUATOR REGI SENSOR	1	SA
7.13-1-17	JC72-01320A	PMO-ACT EMPTY ADF	1	SA
7.13-1-18	JC70-10467A	IPR-GROUND_ROLLER	1	SNA
7.13-1-19	JC63-00372A	GROUND-P-ADF R2	1	SA
7.13-1-20	JC39-00534A	CBF HARNESS-ADF R GND	1	SA
7.13-1-21	JC39-00538A	CBF HARNESS-ADF CLUT1	1	SA
7.13-2	JC96-03783A	ELA HOU-ADF MOTOR	1	SA
7.13-2-1	JC61-01589A	BRACKET-P-GEAR H	1	SNA
7.13-2-2	JC31-00036A	MOTOR STEP-ADF	1	SNA
7.13-2-3	JC39-00617A	CBF HARNESS-ADF GND	1	SNA
7.13-2-4	JC66-00458A	GEAR-IDLE 35 ADF	2	SNA
7.13-2-5	6044-000125	RING-E	5	SNA
7.13-2-6	JC66-01174A	GEAR-40/21	1	SNA
7.13-2-7	6044-000231	RING-E	1	SNA
7.13-2-8	JC66-01175A	GEAR-24	1	SNA
7.13-2-9	JC66-00456A	GEAR-40/21 ADF	1	SNA
7.13-2-10	JC66-01177A	LINK-M_SWING	1	SNA
7.13-2-11	JC66-00457A	GEAR-SWING 31/20 ADF	1	SNA
7.13-2-12	JC66-00455A	GEAR-58/25 ADF	1	SNA
7.13-2-13	6044-000231	RING-E	1	SNA
7.13-2-14	JB70-00070A	IPR-WASHER WAVE	1	SNA
7.13-2-15	JC66-00457A	GEAR-SWING 31/20 ADF	1	SNA
7.13-2-17	6031-000023	WASHER-PLAIN	1	SNA
7.13-2-18	JC66-00662A	SHAFT-REGI	2	SNA
7.13-2-19	JC66-00556A	IMPELLER-ADF	1	SNA
7.13-2-20	JC61-00423A	BUSH-6_D	2	SNA
7.13-3	JC97-02410A	MEA-ADF UPPER	1	SNA

ADF Ass'y Parts List

SA : SERVICE AVAILABLE, SNA : SERVICE not AVAILABLE

Drawer#	SEC_Code	Description	QT'y	Service
7.13-3-1	JC63-00985A	COVER-M_ADF UPPER	1	SA
7.13-3-2	JC97-01940B	MEA UNIT-HOLDER ADF	1	SA
7.13-3-2-1	JC61-00893B	HOLDER-M_PAD ADF	1	SA
7.13-3-2-3	JC63-00373A	SHEET-ADF HOLDER	1	SNA
7.13-3-2-4	JB73-00052A	RMO-ADF RUBBER	1	SA
7.13-3-2-5	JC66-00738A	DAMPER-PAD ADF_R2	2	SNA
7.13-3-3	JC66-00461A	ROLLER-M-ADF IDLE	1	SA
7.13-4	JC97-01962C	MEA UNIT-PICKUP	1	SA
7.13-4-1	JC72-00734A	PMO-COVER ADF	1	SA
7.13-4-2	JB66-00103A	GEAR-ADF 38	1	SA
7.13-4-3	JC61-00963B	STOPPER-M_PICKUP ADF	1	SA
7.13-4-4	JC66-00561A	SHAFT-ADF PICKUP	1	SA
7.13-4-5	JB70-00168A	ICT-PIN ADF	2	SA
7.13-4-6	6031-000023	WASHER-PLAIN	1	SA
7.13-4-7	JC72-00734A	PMO-COVER ADF	1	SA
7.13-4-8	JB75-00300A	MEC-PICK UP ROLLER ASSY	1	SA
7.13-4-8A	JB72-00823A	PMO-SLEEVE PICK UP	1	SA
7.13-4-8B	JB73-00055A	RMO-PICKUP ROLLER	1	SNA
7.13-4-9	JB72-00821A	PMO-ADF COLAR	1	SA
7.13-4-10	JB61-70904A	SPRING ETC-CLUTCH	1	SA
7.13-4-11	JB72-00817A	PMO-ADF CLUTCH	1	SA
7.13-4-12	JB66-00104A	GEAR-ADF IDLE 34	1	SA
7.13-4-13	JC72-00744A	PMO-SHAFT PICK UP	1	SA
7.13-4-14	JB66-00105A	GEAR-PICK UP 26	1	SA
7.13-4-15	JB72-00845A	PMO-PICK UP CLUTCH SUB	2	SA
7.13-4-16	JB75-00299A	MEC-ADF ROLLER ASSY	1	SA
7.13-4-16A	JB73-00054A	RMO-ADF ROLLER	1	SNA
7.13-4-16B	JB72-00822A	PMO-SLEEVE ADF	1	SA
7.13-4-17	6044-000159	RING-C	1	SA
7.13-5	JC97-02411A	MEA-COVER OPEN	1	SA
7.13-5-1	JC63-00983A	COVER-M_ADF OPEN	1	SNA
7.13-5-2	JB72-00843A	PMO-GUIDE PAPER	2	SA
7.13-5-3	JC66-00738A	DAMPER-PAD ADF_R2	1	SNA

7.14 OPE Unit

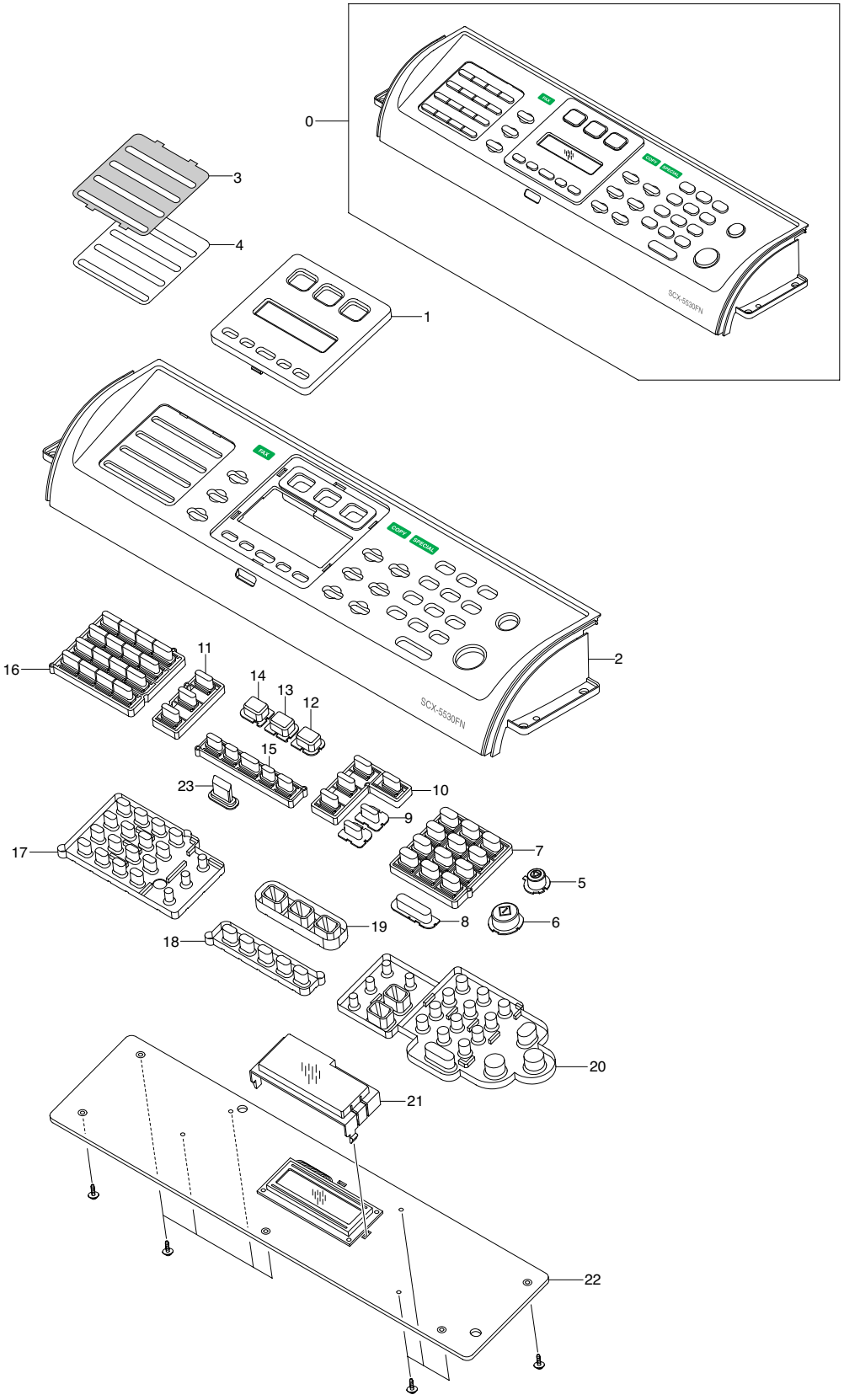

OPE Ass'y Parts List

SA : SERVICE AVAILABLE, SNA : SERVICE not AVAILABLE

Drawer#	SEC_Code	Description	QT'y	Service
7.14-0	JC96-03787K	ELA HOU-OPE 4IN1	1	SA
7.14-1	JC63-00991K	COVER-M_NEVI	1	SNA
7.14-2	JC63-00986K	COVER-M_OPE 4IN1 MONO	1	SNA
7.14-3	JC63-00999A	SHEET-ONETOUCH	1	SNA
7.14-4	JC68-01639A	LABEL-ONETOUCH	1	SNA
7.14-5	JC64-00242A	KEY-M_STOP CLEAR	1	SNA
7.14-6	JC64-00243A	KEY-M_START BLACK	1	SNA
7.14-7	JC64-00239A	KEY-M_TEL	1	SNA
7.14-8	JC64-00249A	KEY-M_ON HOOK	1	SNA
7.14-9	JC64-00244A	KEY-M_BLACK	2	SNA
7.14-10	JC64-00240A	KEY-M_COPY	1	SNA
7.14-11	JC64-00241A	KEY-M_FAX	1	SNA
7.14-12	JC64-00247A	KEY-M_MODE SCAN	1	SNA
7.14-13	JC64-00245A	KEY-M_MODE COPY	1	SNA
7.14-14	JC64-00246A	KEY-M_MODE FAX	1	SNA
7.14-15	JC64-00248A	KEY-M_MENU	1	SNA
7.14-16	JC64-00250A	KEY-M_ONETOUCH	1	SNA
7.14-17	JC73-00231A	RUBBER-ONETOUCH	1	SNA
7.14-18	JC73-00230A	RUBBER-MENU	1	SNA
7.14-19	JC73-00233A	RUBBER-MODE	1	SNA
7.14-20	JC73-00232A	RUBBER-TEL_COPY	1	SNA
7.14-21	JC63-00993A	COVER-M_LCD	1	SA
7.14-22	JC92-01747A	PBA SUB-OPE	1	SA
7.14-23	JC67-00148A	LENS LED-M_STATUS	1	SNA

7.15 Cassette Ass'y

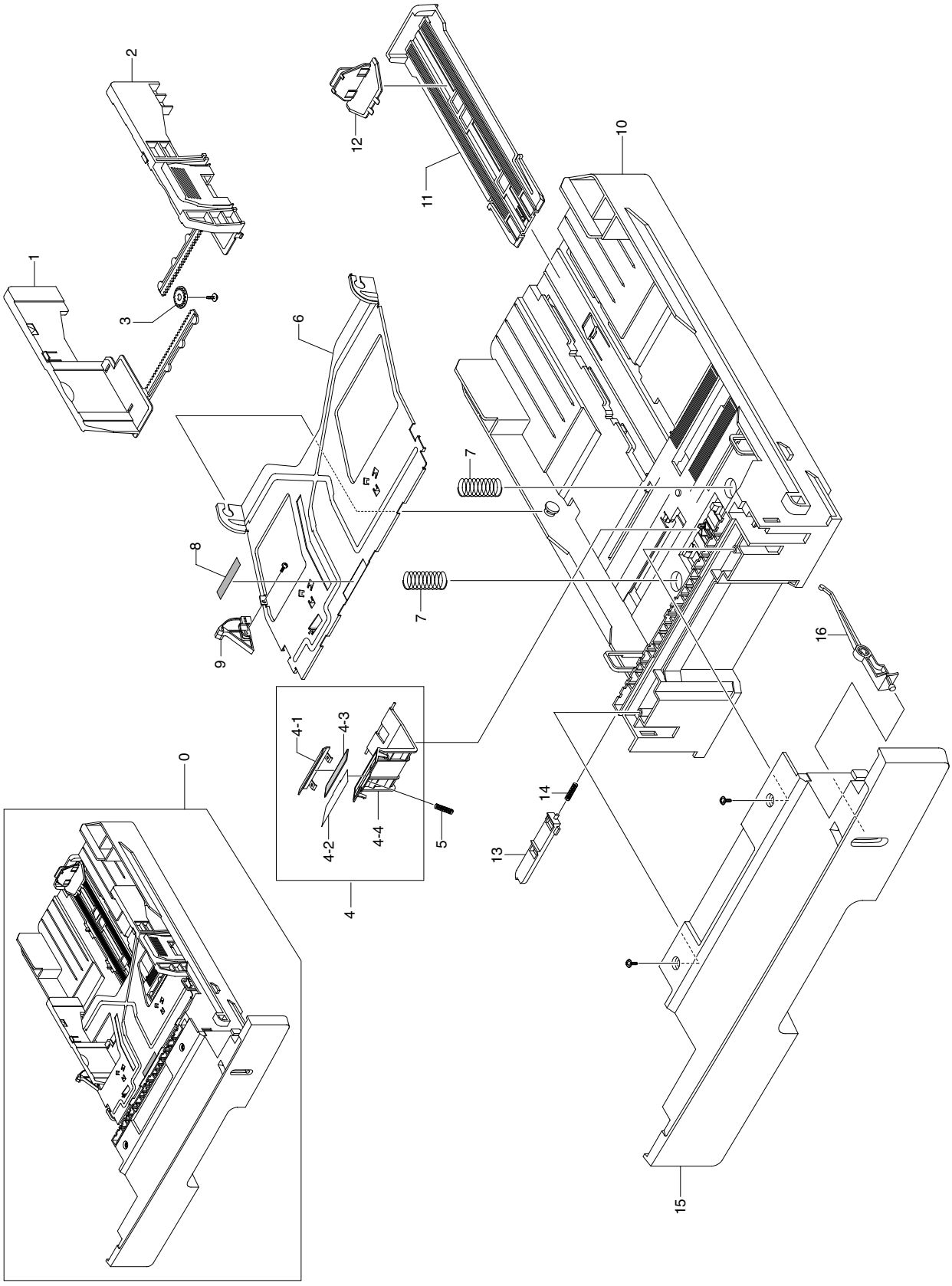

Cassette Ass'y Parts List

SA : SERVICE AVAILABLE, SNA : SERVICE not AVAILABLE

Drawer#	SEC_Code	Description	QT'y	Service
7.15-0	JC97-02413A	MEA UNIT-CASSETTE	1	SA
7.15-1	JC70-00300A	ADJUST-M-CASSETTE_L	1	SA
7.15-2	JC70-00301A	ADJUST-M-CASSETTE_R	1	SA
7.15-3	JG66-40003A	GEAR-PINION	1	SA
7.15-4	JC97-01931A	MEA UNIT-HOLDER PAD	1	SA
7.15-4-1	JC61-00580A	HOLDER-M-PAD	1	SA
7.15-4-2	JC63-00407A	SHEET-HOLDER PAD R2	1	SNA
7.15-4-3	JC70-00314A	IPR-PLATE PAD	1	SA
7.15-4-4	JC73-00140A	RPR-FRICTION PAD	1	SA
7.15-5	JC61-70911A	SPRING ETC-EXIT ROLL FD	1	SA
7.15-6	JC61-00603A	PLATE-P-KNOCK_UP	1	SNA
7.15-7	6107-001166	SPRING-CS	2	SA
7.15-8	JC73-00141A	RPR-PAD CASSETTE	1	SA
7.15-9	JC66-00719A	CAM-M-KNOCK UP	1	SNA
7.15-10	JC61-00876A	FRAME-M_CASSETTE	1	SNA
7.15-11	JC61-00918B	GUIDE-M-EXTENSION L2	1	SA
7.15-12	JC72-00971A	PMO-EXTENSION SMALL	1	SA
7.15-13	JC72-00972A	PMO-PLATE_LOCKER	1	SA
7.15-14	JG61-70531A	SPRING ETC-LOCKER,PLATE	1	SA
7.15-15	JC63-00939A	COVER-M_SUB CST	1	SNA
7.15-16	JC64-00253A	INDICATOR-M_CASSETTE	1	SNA

7.16 Fuser Ass'y

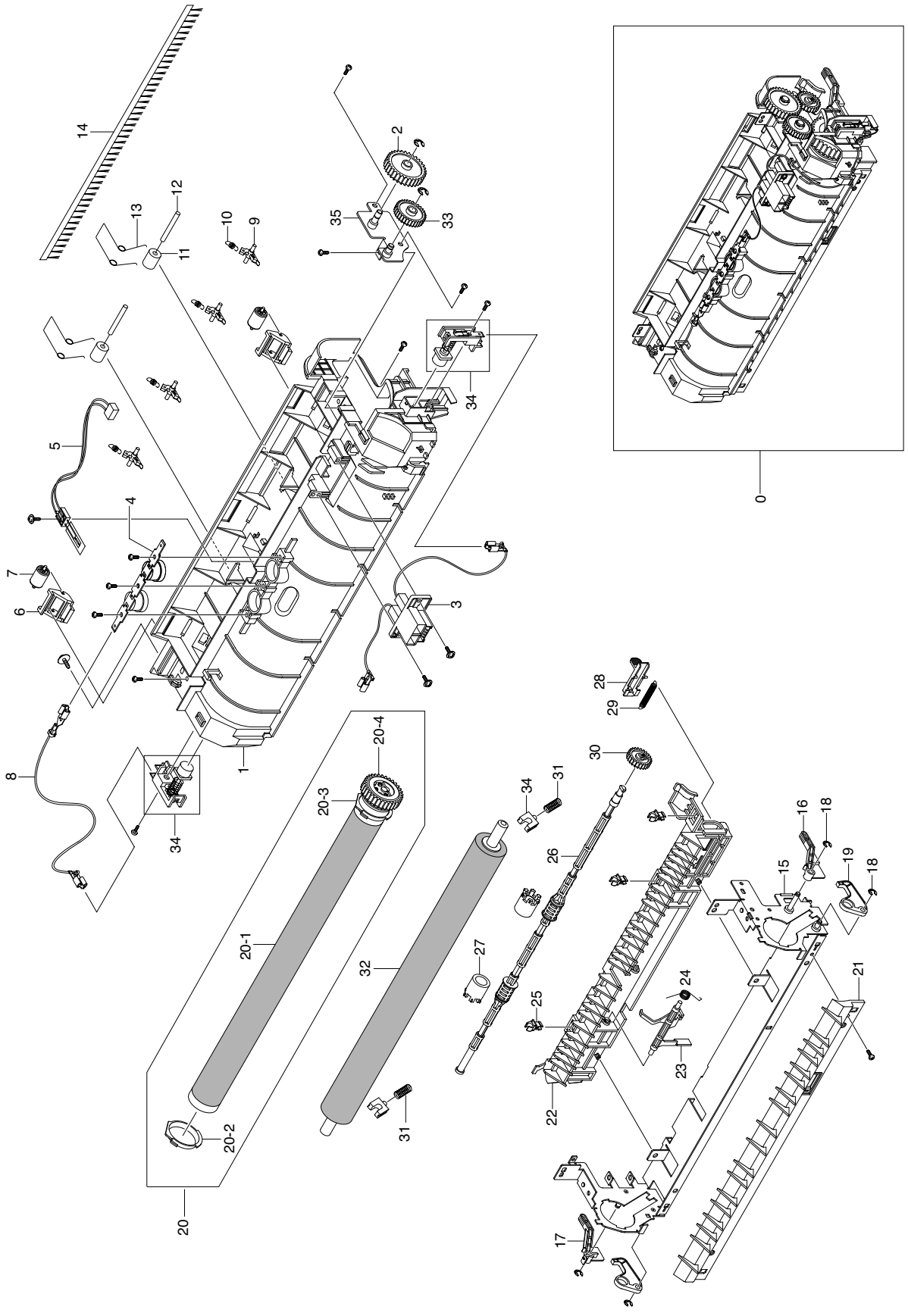

Fuser Ass'y Parts List

SA : SERVICE AVAILABLE, SNA : SERVICE not AVAILABLE

Drawer#	SEC_Code	Description	QT'y	Service
7.16-0	JC96-03799A	ELA UNIT-FUSER_110V	1	SA
7.16-0	JC96-03800A	ELA UNIT-FUSER_220V	1	SA
7.16-1	JC61-01632A	FRAME-P-FUSER	1	SNA
7.16-2	JC66-00425A	GEAR-IDLE 33	1	SA
7.16-3	JC39-00520A	CBF HARNESS-FUSER CON	1	SA
7.16-4	4712-001031	THERMOSTAT	1	SA
7.16-5	1404-001364	THERMISTOR-NTC ASSY	1	SA
7.16-6	JC61-00785A	HOLDER-M-IDLE ROLLER	1	SA
7.16-7	JC72-40981A	PMO-ROLLER UPPER DP	1	SA
7.16-8	JC39-00521A	CBF HARNESS-FUSER REC	1	SA
7.16-9	JC72-41128B	PMO-GUIDE CLAW GREEN	4	SA
7.16-10	6107-001291	SPRING-ES	1	SNA
7.16-11	JC72-20902A	PEX-ROLLER F/UP(2)	2	SA
7.16-12	JC70-20901A	IEX-SHAFT IDLE,F/UP	2	SA
7.16-13	6107-001159	SPRING-TS	2	SA
7.16-14	JC75-00095A	MEC-BRUSH ANTISTATIC	1	SA
7.16-15	JC61-01627A	BRACKET-P-FUSER	1	SNA
7.16-16	JC61-01306A	HOLDER-M_JAM R	1	SNA
7.16-17	JC61-01305A	HOLDER-M_JAM L	1	SNA
7.16-18	6044-000125	RING-E	2	SA
7.16-19	JC66-00957A	LEVER-M_LINK JAM	2	SNA
7.16-20	JC96-03803A	ELA UNIT-HEAT 110V	1	SA
7.16-20	JC96-03804A	ELA UNIT-HEAT 220V	1	SA
7.16-20-1	JC66-01211A	ROLLER-HEAT	1	SNA
7.16-20-2	JC66-10901A	BEARING-PRESSURE/R	1	SA
7.16-20-3	JC61-01629A	BUSH-M_HR R	1	SNA
7.16-20-4	JC66-01193A	GEAR-M_FUSER_ECOIL	1	SNA
7.16-21	JC63-01004A	COVER-M_FUSER_ECOIL	1	SNA
7.16-22	JC61-01633A	GUIDE-M_REAR	1	SNA
7.16-23	JC72-00988A	PMO-ACTUATOR EXIT	1	SNA
7.16-24	JC61-70903A	SPRING ETC-ACTUATOR	1	SA
7.16-25	JC72-00382A	PMO-BUSHING TX	3	SNA
7.16-26	JC66-00402A	SHAFT-M-EXIT_F/UP	1	SA
7.16-27	JC73-40909B	RMO-RUBBER EXIT_F/UP	1	SNA
7.16-28	JC61-01625A	HOLDER-M_REAR_LEVER	1	SNA
7.16-29	6107-001237	SPRING-ES	1	SNA
7.16-30	JC66-40209A	GEAR-EXIT	1	SA
7.16-31	JC61-00047A	SPRING ETC-TR L HAWK	1	SA
7.16-32	JC66-01195A	ROLLER-PRESSURE	1	SA
7.16-33	JC66-00426B	GEAR-IDLE 23	1	SNA
7.16-34	JC67-00154A	CAP-M_END_ECOIL	2	SNA
7.16-35	Not assign	BRACKET-FUSER GEAR	1	SNA

7.17 Duplex Unit(Optional)

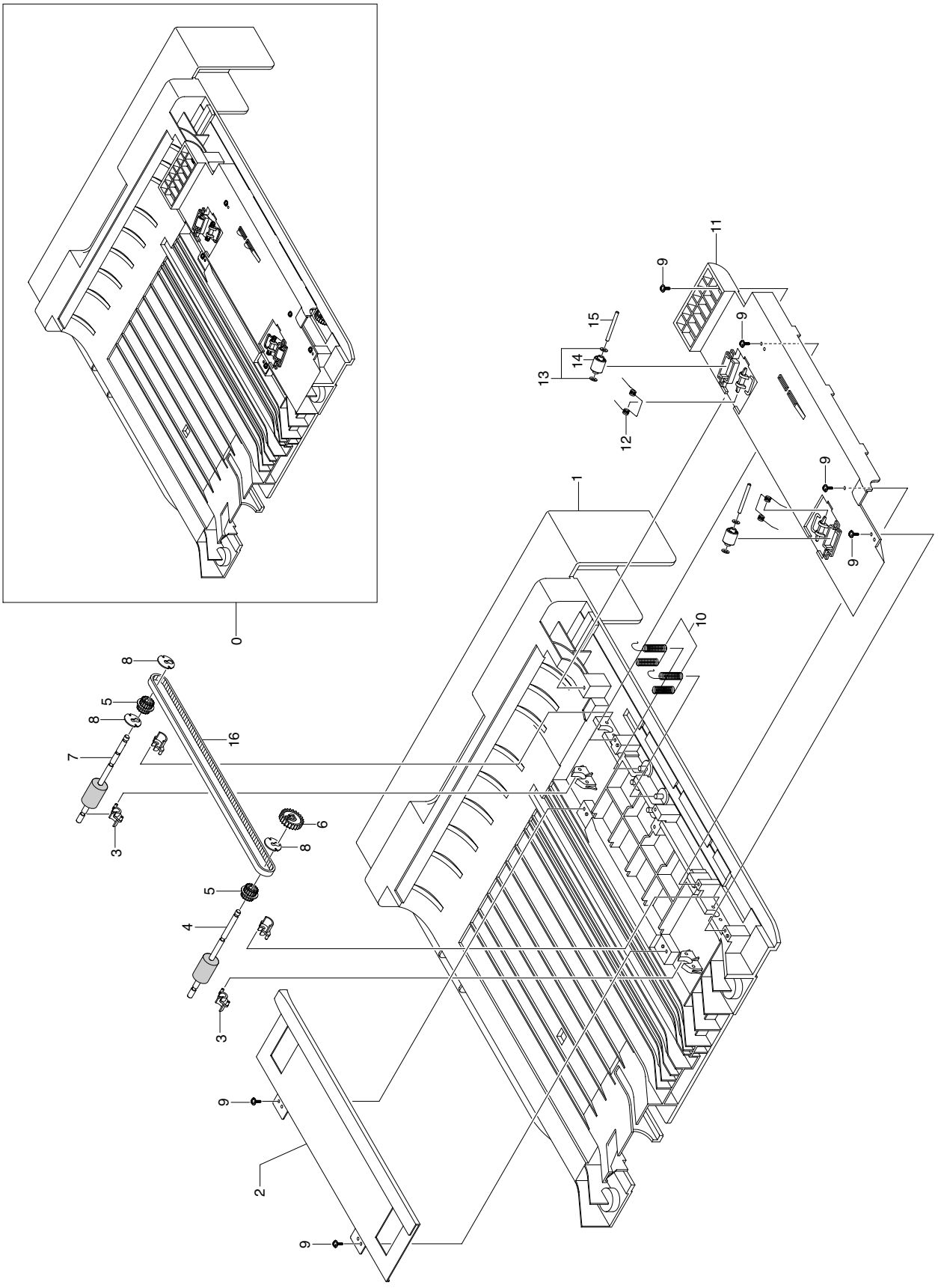

Duplex Unit (Optional) Parts List

SA : SERVICE AVAILABLE, SNA : SERVICE not AVAILABLE

Drawer#	SEC_Code	Description	QT'y	Service
7.17-0	JC97-02393A	MEA UNIT-DUPLEX	1	SA
7.17-1	JC61-01594A	FRAME-M_DUP	1	SNA
7.17-2	Not assign	GUIDE-M_DUMMY	1	SNA
7.17-3	JC61-00665A	BUSH-M-FEED, DUP	4	SA
7.17-4	JC96-03662B	ELA UNIT-ROLLER_DUP2	1	SNA
7.17-5	JC66-00699A	PULLEY-18-DUP	2	SNA
7.17-6	JC66-00038A	GEAR-EXIT F/DOWN	1	SA
7.17-7	JC96-03662A	ELA UNIT-ROLLER_DUP	1	SNA
7.17-8	JC66-00900A	PULLEY-M-18-DUMMY_DUP	3	SA
7.17-9	6003-000196	SCREW-TAPTITE	6	SA
7.17-10	JC65-00017A	TERMINAL-P-GND DUP	1	SNA
7.17-11	JC61-01595A	GUIDE-M_UPPER DUP	1	SNA
7.17-12	6107-001156	SPRING-TS	2	SA
7.17-13	JK72-00058A	PCT-SILP WASHER	4	SNA
7.17-14	JC66-00896A	ROLLER-M-IDLE_ DUP	1	SA
7.17-15	JC66-00444A	SHAFT-IDLE ROLL, DUP	1	SA
7.17-16	JC66-20901A	BELT-TIMMING	1	SA

8. Exploded Views and Parts List

Contents

8.1 Main 8-2
8.2 Housing Scanner 8-3
8.3 OPE Cover 8-4
8.4 Platen Cover Ass'y 8-5
8.5 ADF Ass'y 8-6
8.6 DADF Ass'y 8-7
8.7 DADF Platen Cover Ass'y 8-8
8.8 DADF SUB Ass'y 8-9
8.9 Side Cover Ass'y 8-10
8.10 Cassette Ass'y 8-11
8.11 Exit Ass'y 8-12
8.12 Feeder Ass'y 8-13
8.13 MP Ass'y 8-14
8.14 Base Frame 8-15
8.15 Pick-up Ass'y 8-16
8.16 Drive Ass'y 8-17
8.17 Main Frame Ass'y 8-18
8.18 FuserAss'y 8-19
8.19 SCF Unit(Option Cassette) 8-20

Way to observe Part Code & Description

Part code and Description is quoted and controlled by determined standard. Refer to this determined standard, it will help with ordering Part.

- **There are two kinds of Part code inscription type.**

●●●●–●●●●●●	ex) 2007-007961	R-CHIP
■■●●–●●●●●■ (└ It shows part specific)	ex) JB96-01268A	ELA UNIT-COVER TOP

(● : figure, ■ : character (alphabet))

Type 1 : Controlled by Company : It can be commonly used for all kinds of product SEC produce. Mostly, electronics Parts.

Type 2 : Controlled by Division : It is used or one produce. Mostly, Mostly, mechanical Parts.

- **A/S privately used part :** It is only used for A/S .
- **Ass'y part :** Assembled by more than 2 Parts. If necessary part is not A/S Part, Ass'y part including necessary par can be used. It is shown in the diagram and drawing of SVC manual.

- Ass'y part and A/S privately used Part is distinguished by part Code and Description. The are inscription type 2. It is recognized by Part character and front side of description.

DIVISION	PART CODE	DESCRIPTION
A/S Private	**81-****** (JB81-00039A)	AS-***** (AS-USE)
ASS'Y Part	**75-****** (JB75-00068A)	MEC-***** (MEC-CHUTE)
ASS'Y Part	**92-****** (JB92-01131A)	PBA ****** (PBA MAIN-CONTROLLER)
ASS'Y Part	**97-****** (JB97-01089A)	MEA ****** (MEA UNIT-PULLEY IDLE)

8.1 Main

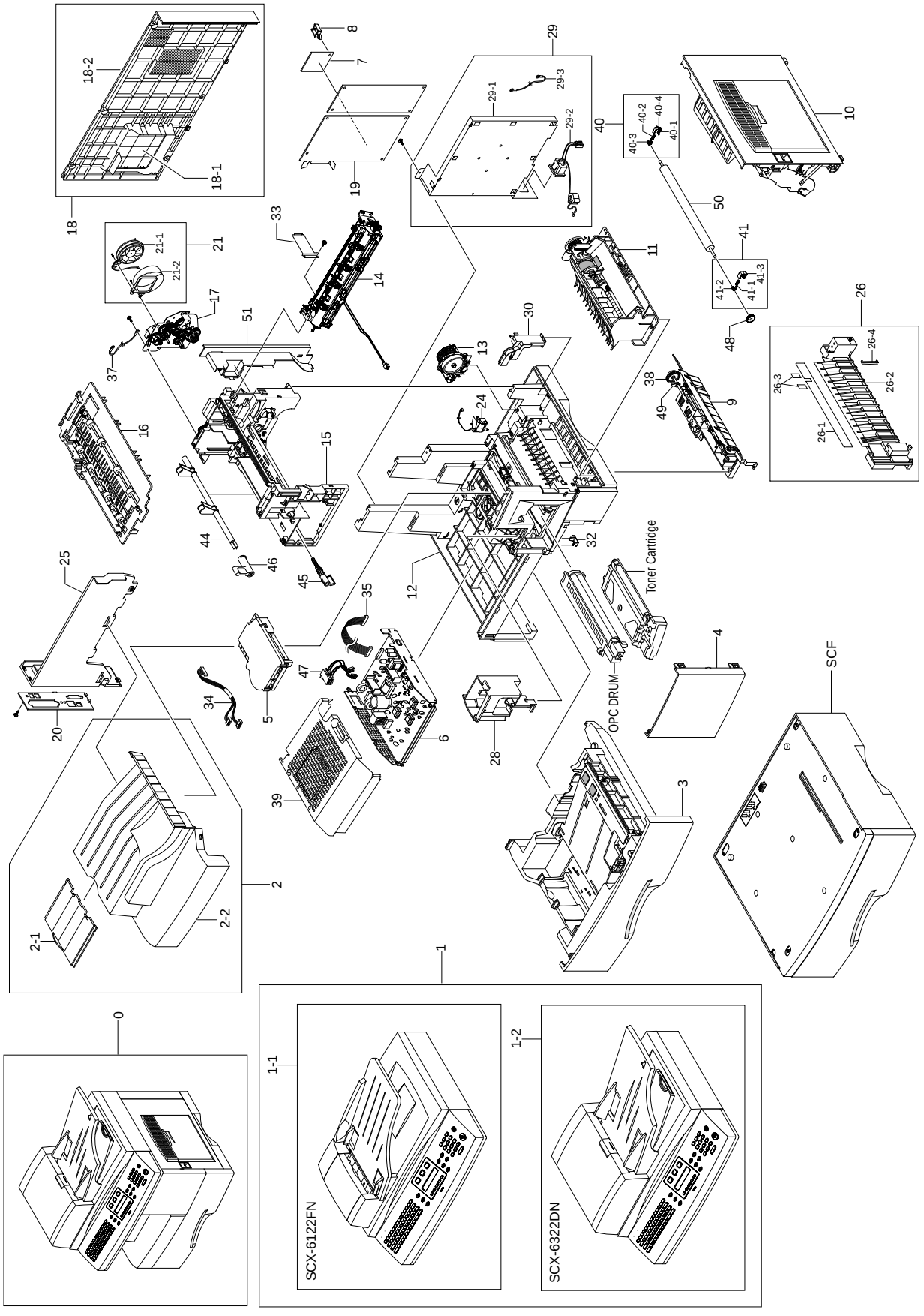
18-2
18-1
18
8
7
19
29
29-1
29-3
29-2
40
40-2
40-4
40-3
40-1
10
50
41
41-2
41-1
41-3
48
21
21-1
21-2
33
14
17
51
37
11
30
13
24
38
49
9
26
26-4
26-3
26-2
26-1
16
15
44
46
45
12
32
Toner Cartridge
OPC DRUM
25
20
35
47
34
5
6
28
4
SCF
39
3
2
2-1
2-2
1
0
1-1
SCX-6122FN
1-2
SCX-6322DN

8.2 Housing Scanner

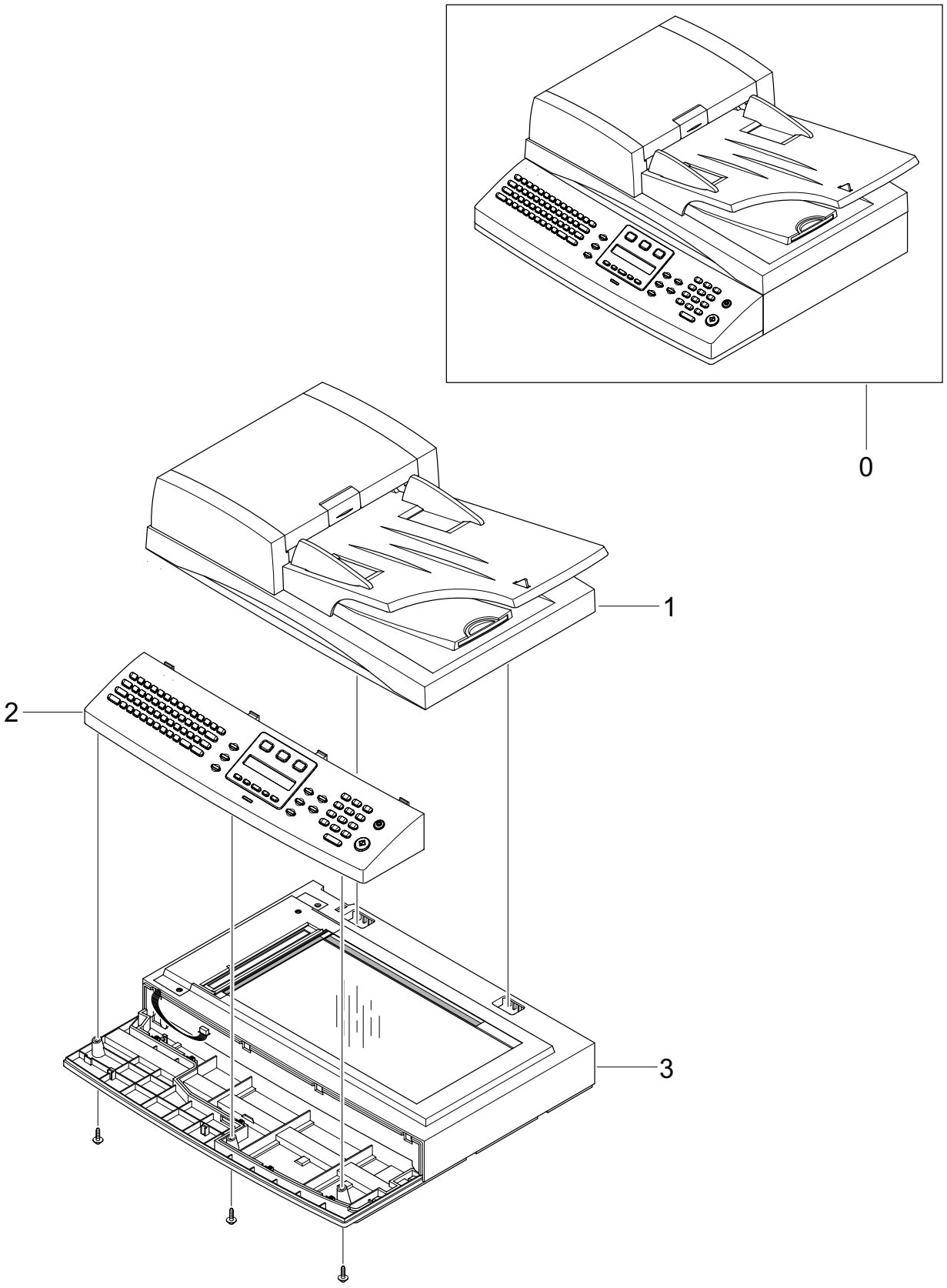

8.3 OPE Cover

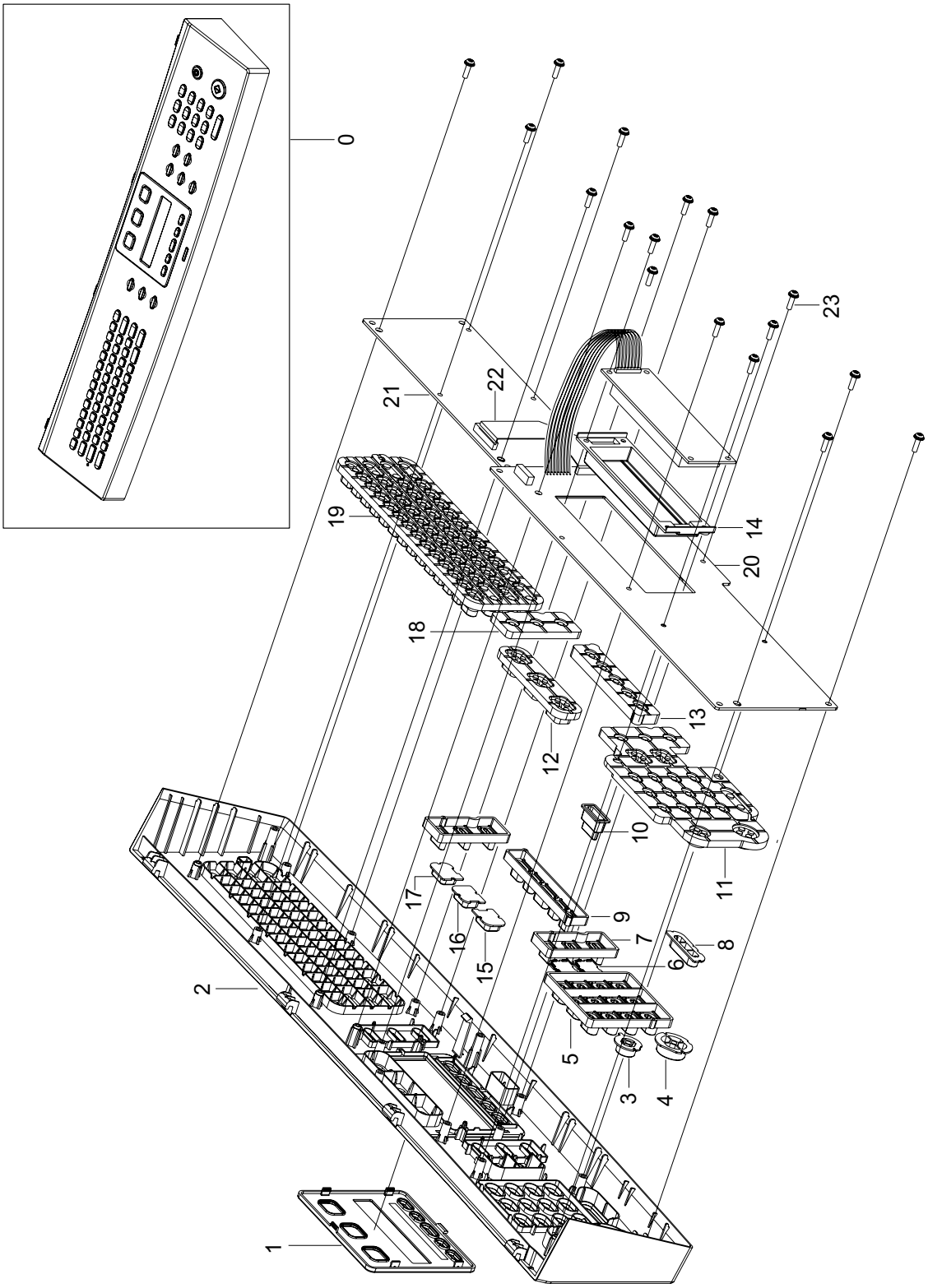

8.4 Platen Cover Ass'y

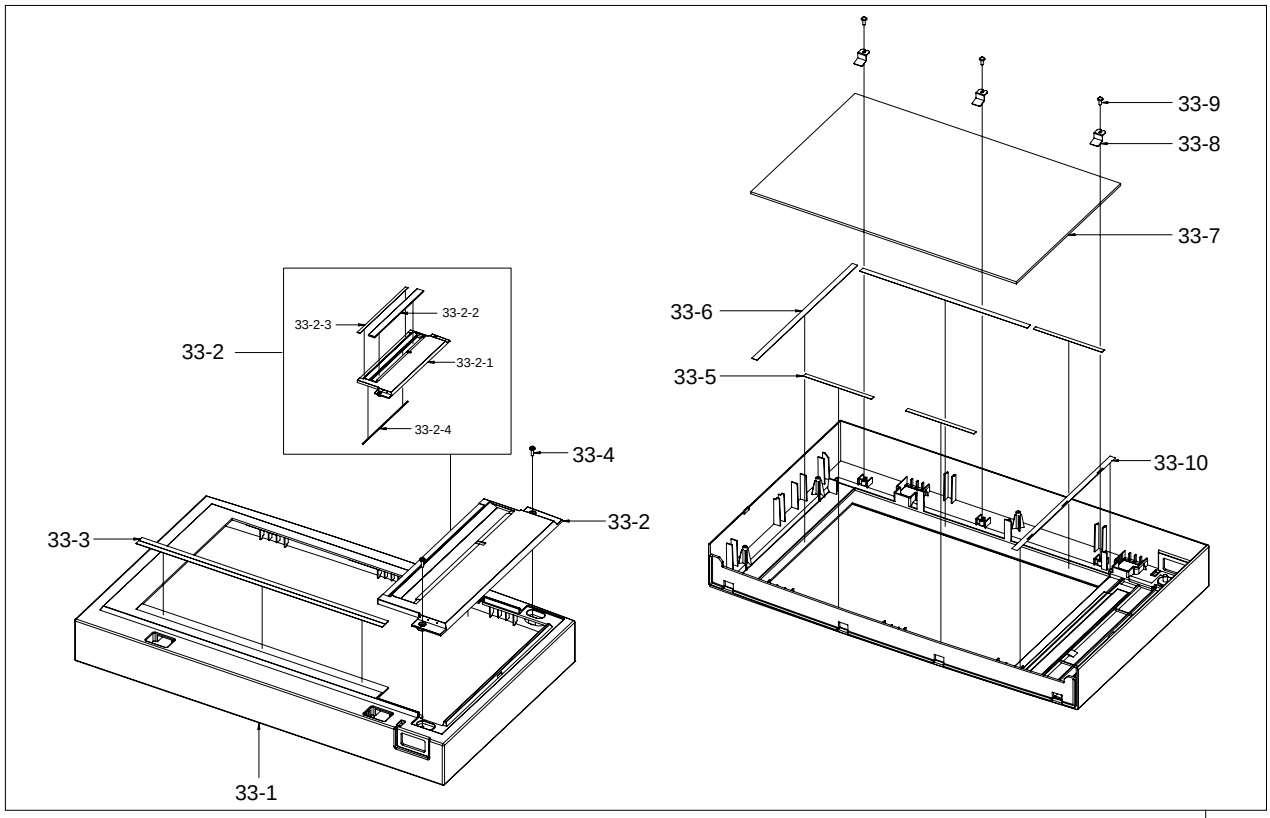

33

34

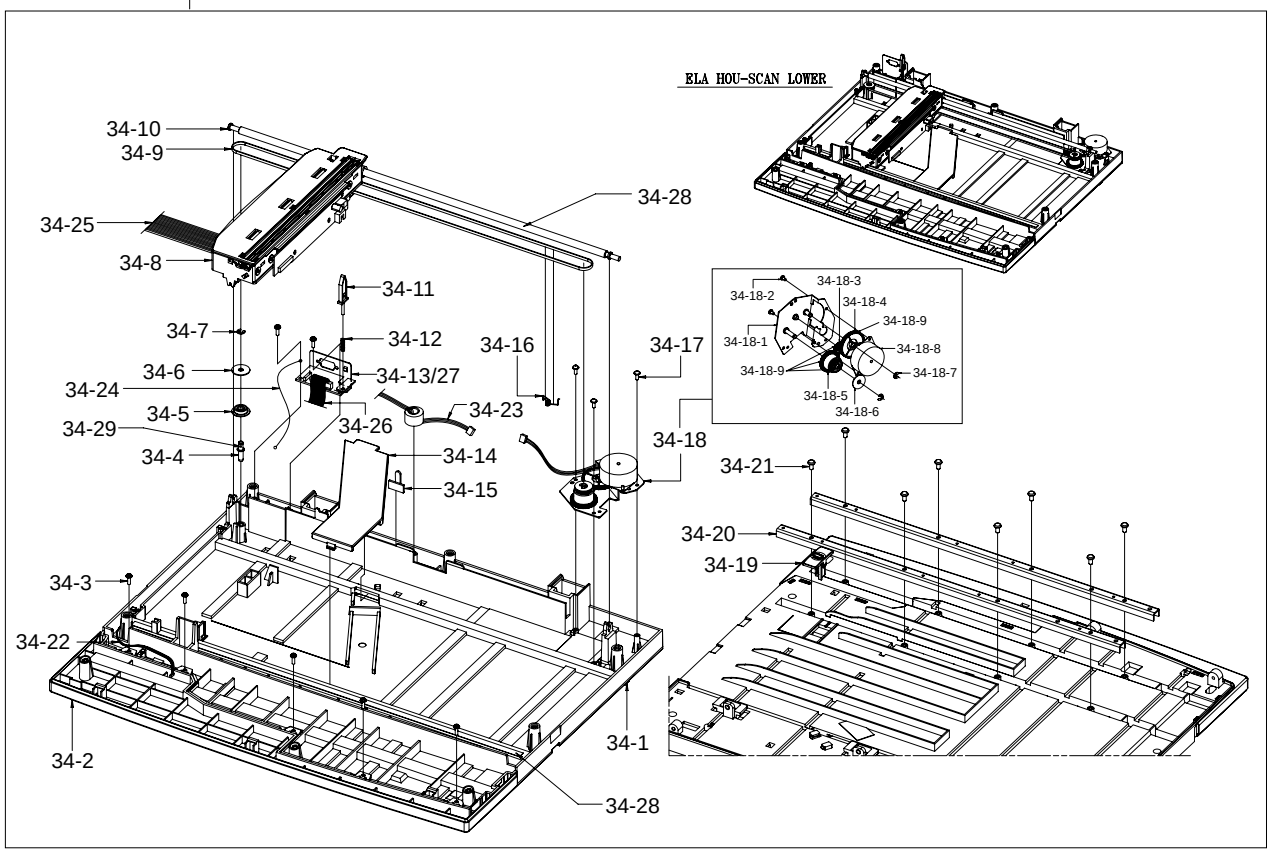

8.5 ADF Ass'y

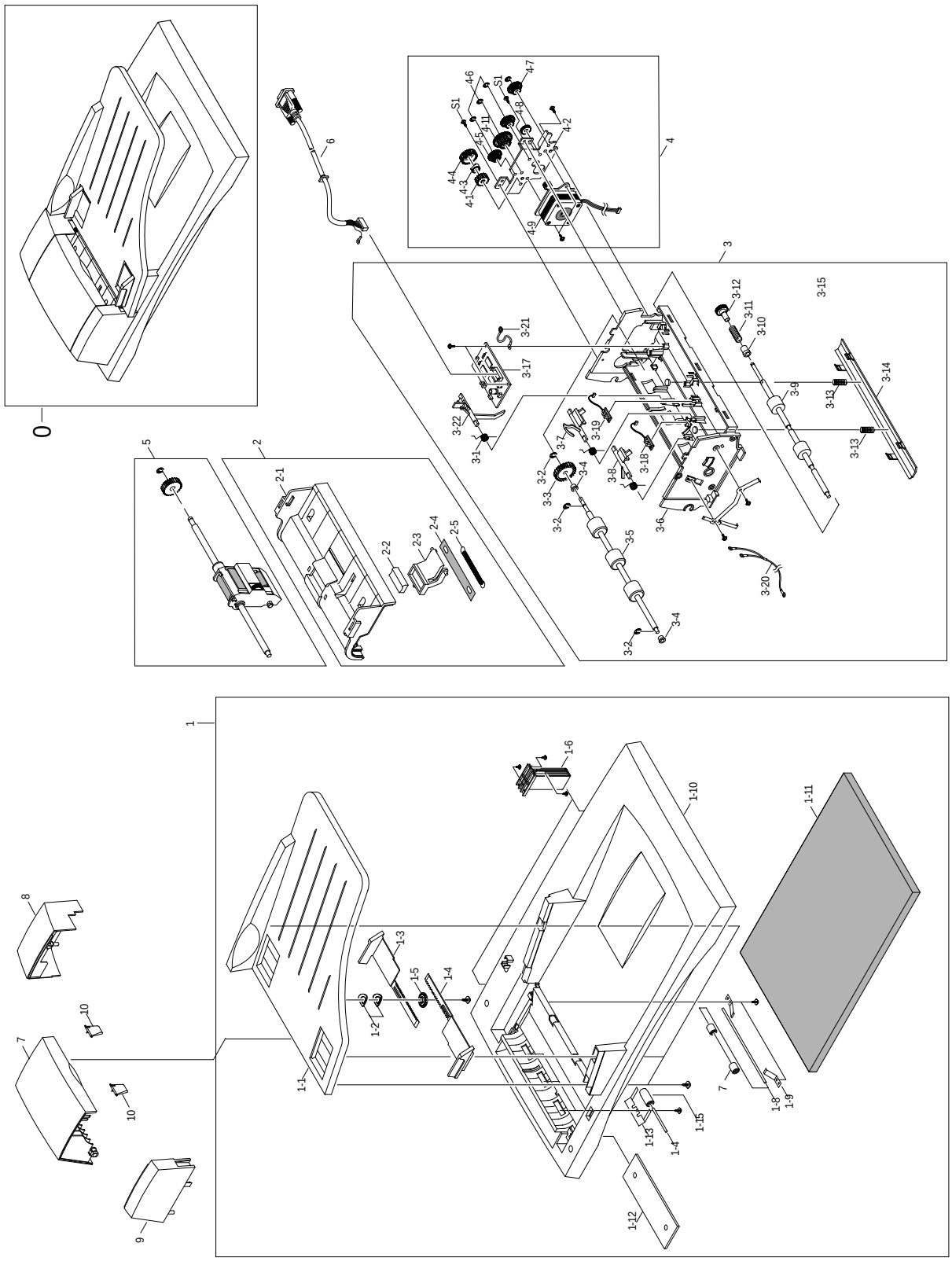
1
1-1
1-2
1-3
1-4
1-5
1-6
1-7
1-8
1-9
1-10
1-11
1-12
1-13
1-15
2
2-1
2-2
2-3
2-4
2-5
3
3-1
3-2
3-3
3-4
3-5
3-6
3-7
3-8
3-9
3-10
3-11
3-12
3-13
3-14
3-15
3-17
3-18
3-19
3-20
3-21
4
4-1
4-2
4-3
4-4
4-5
4-6
4-7
4-8
4-9
4-11
5
6
7
8
9
10
S1

8.6 DADF Ass'y

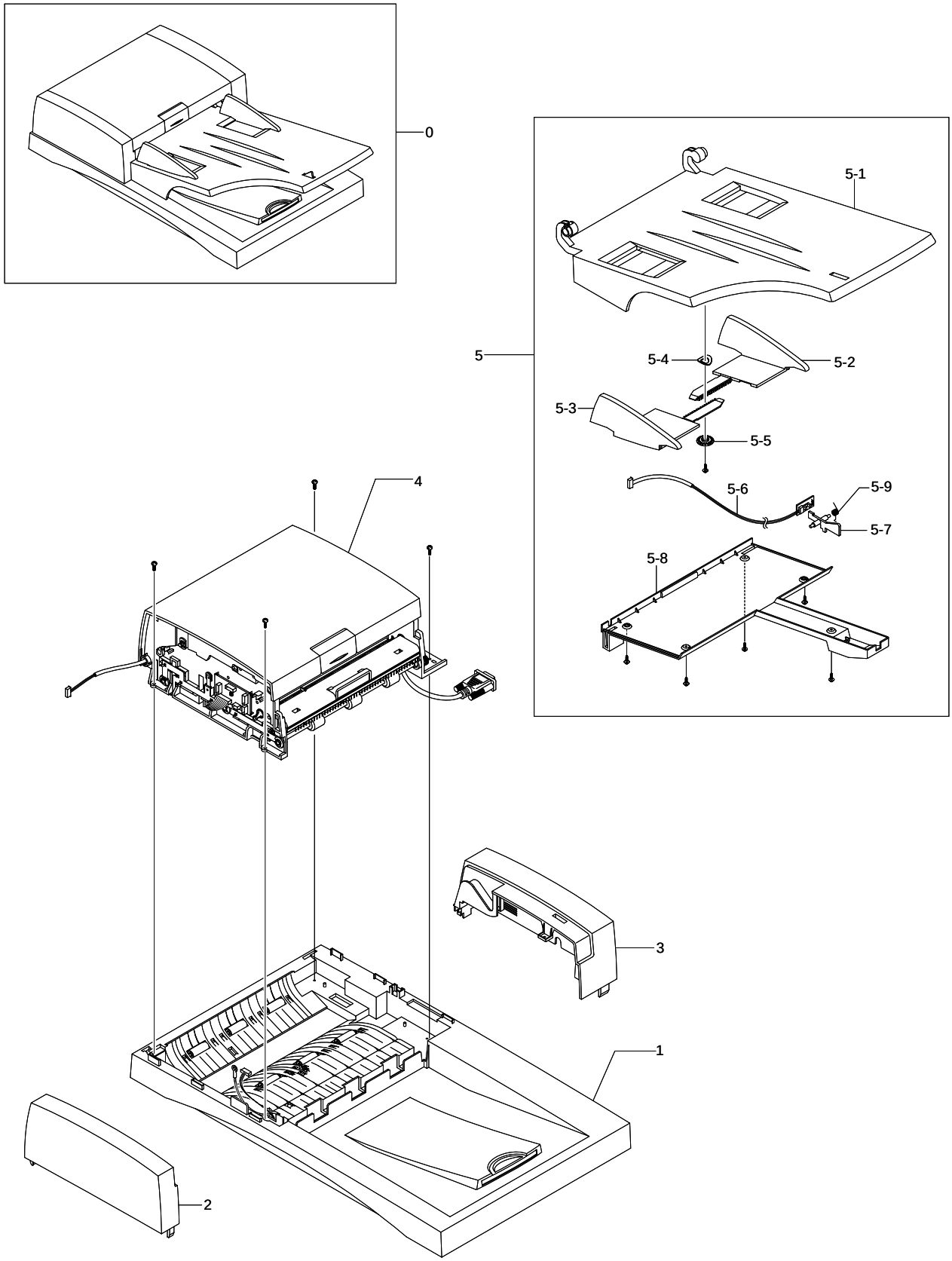

8.7 DADF Platen Cover Ass'y

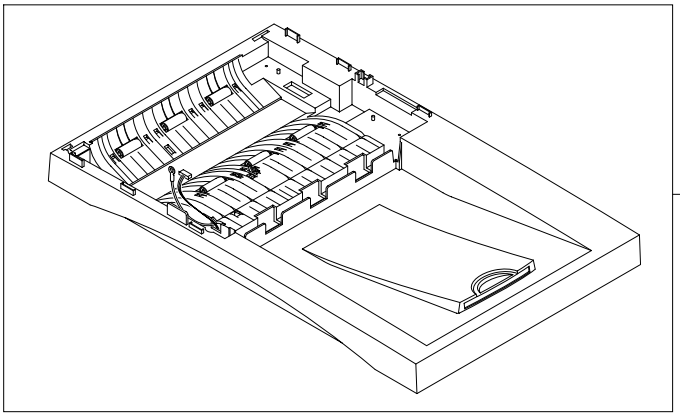

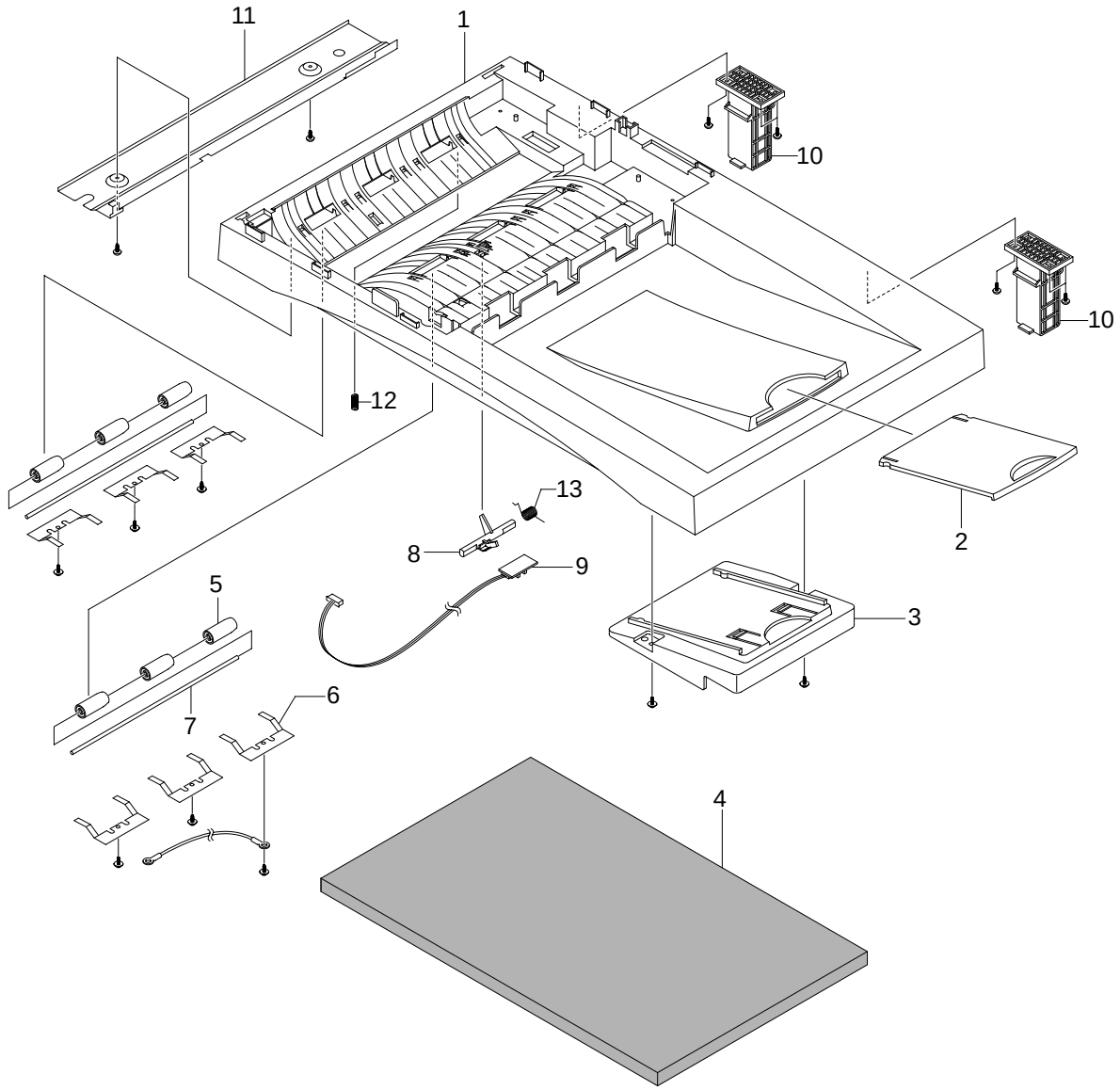

8.8 DADF SUB Ass'y

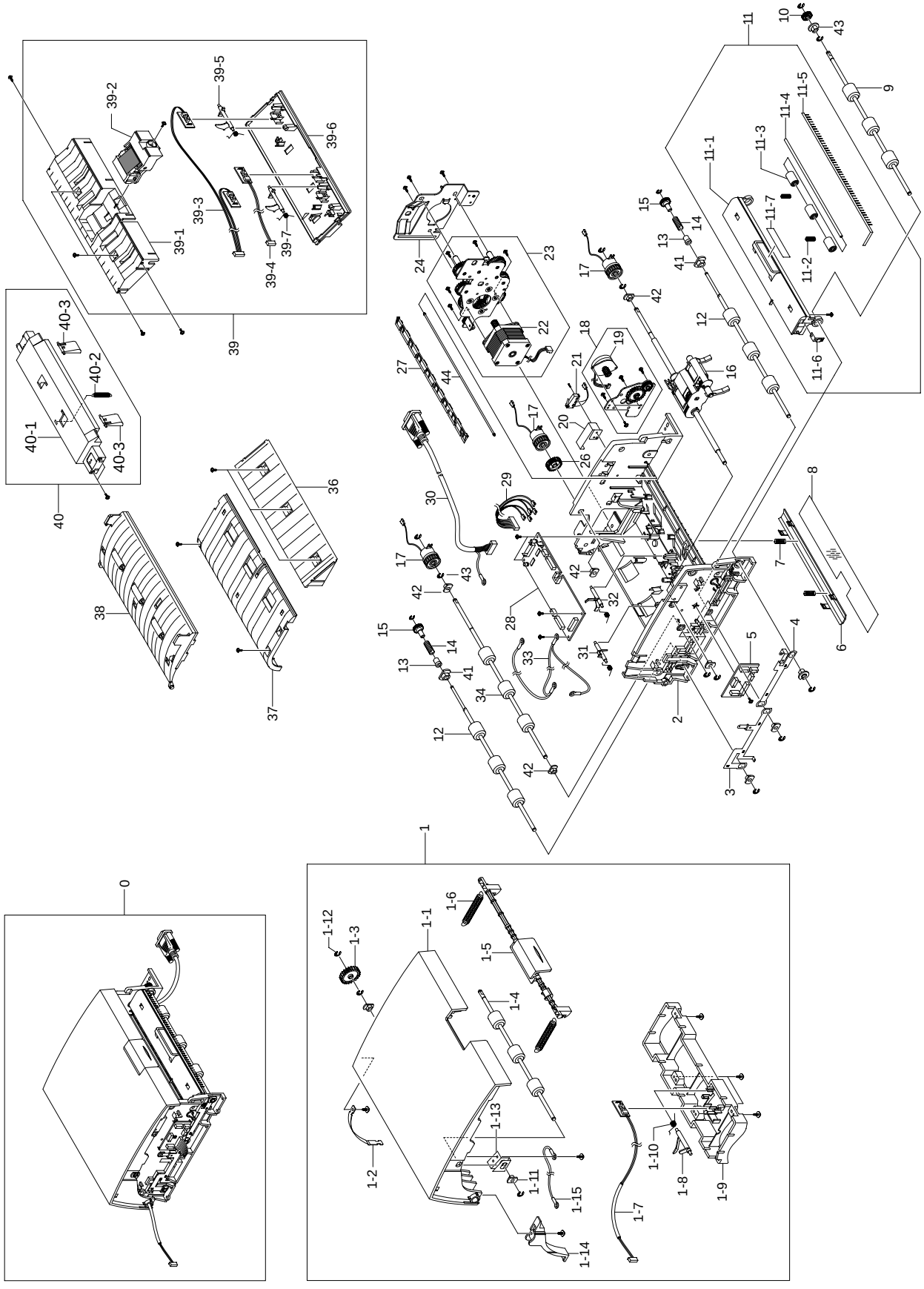

8.9 Side Cover Ass'y

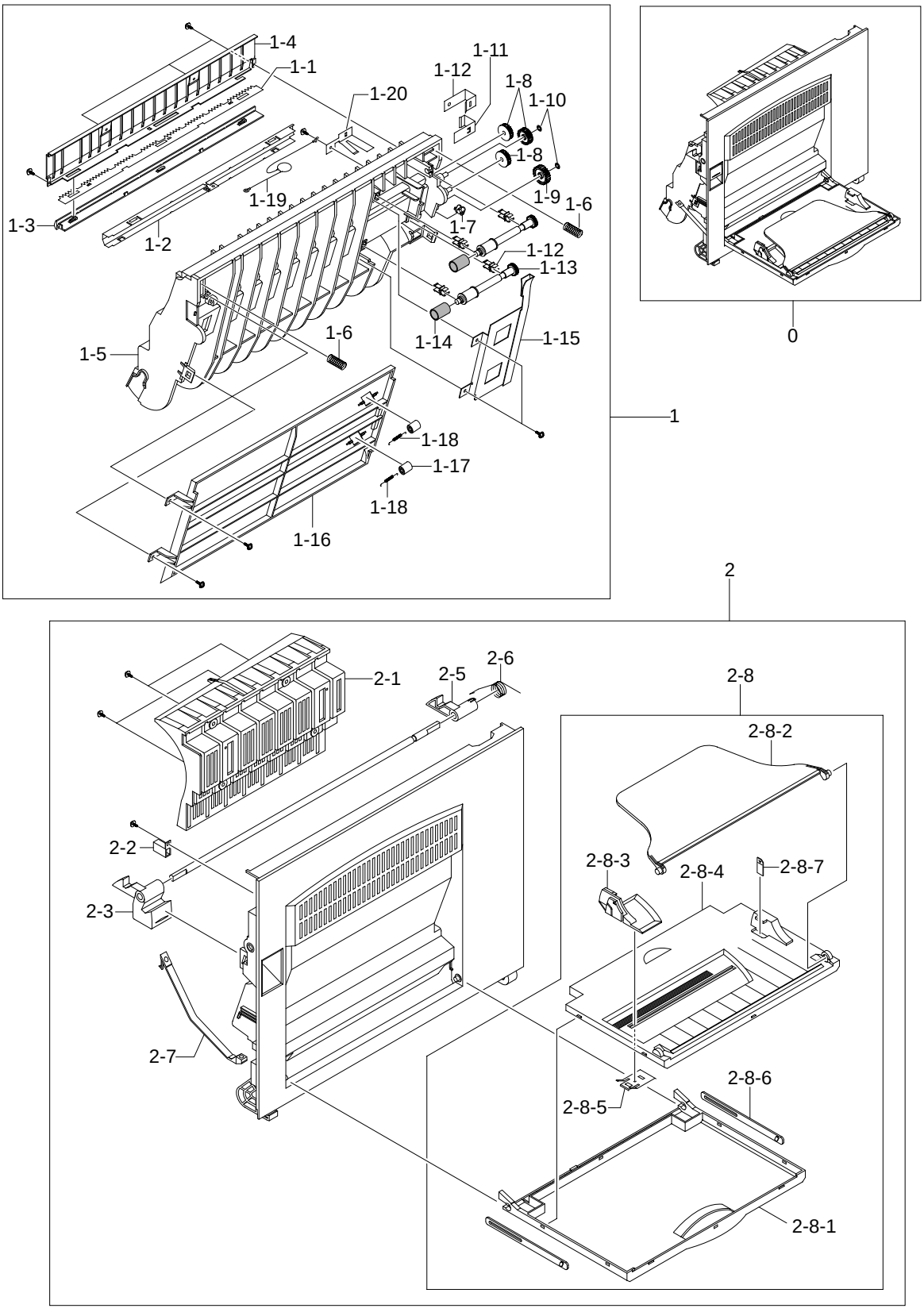

8.10 Cassette Ass'y

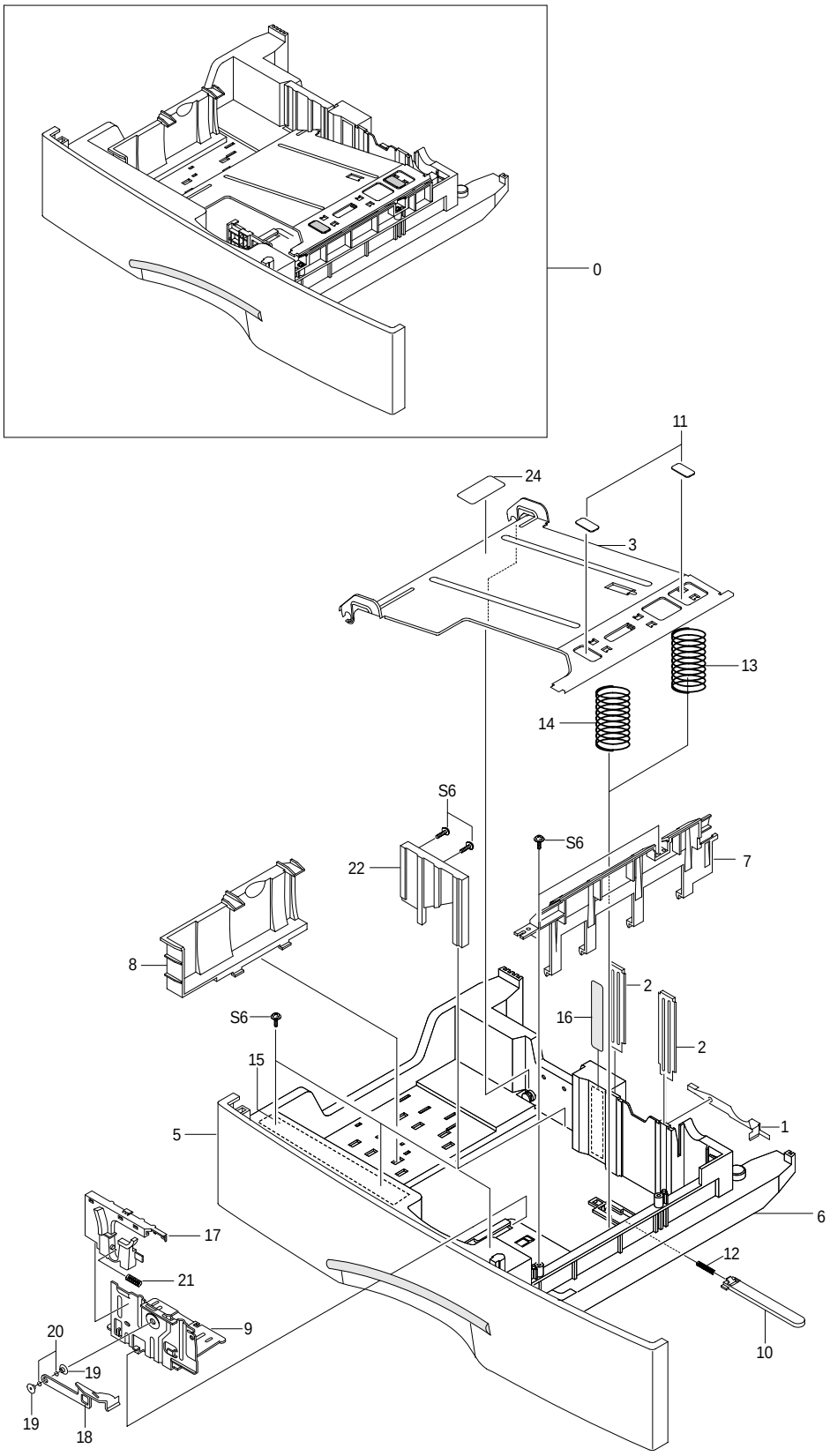

8.11 Exit Ass'y

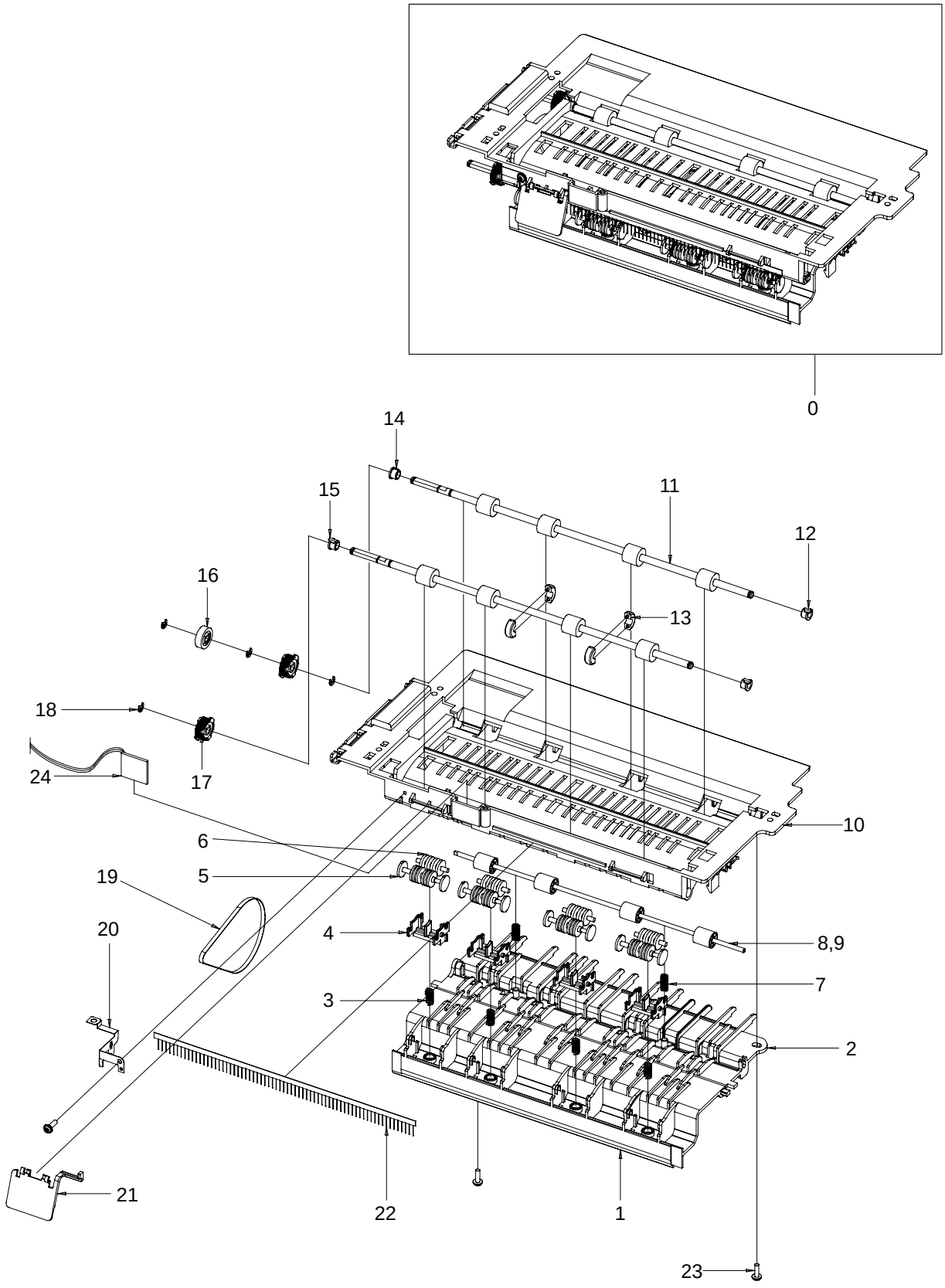

8.12 Feeder Ass'y

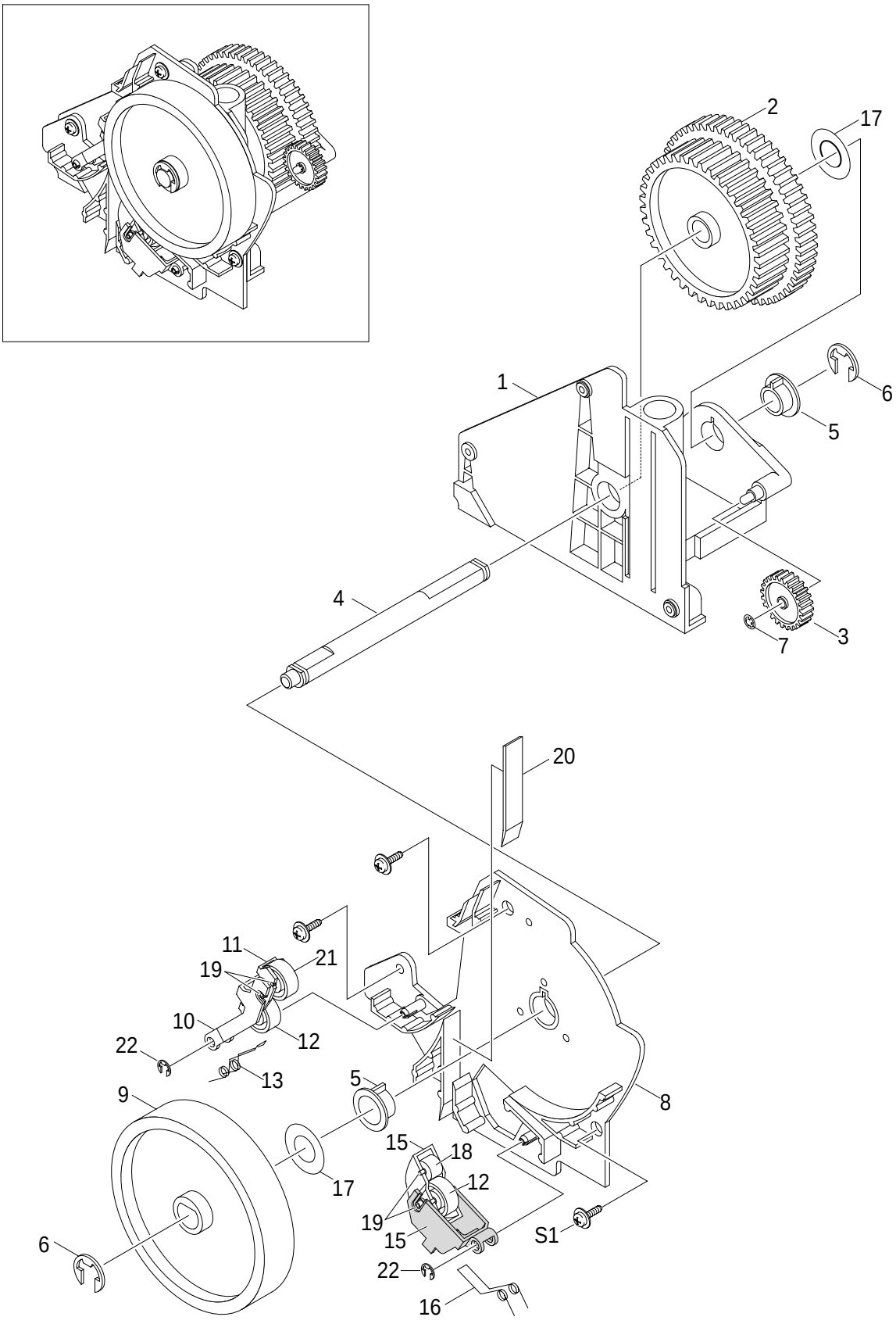

8.13 MP Ass'y

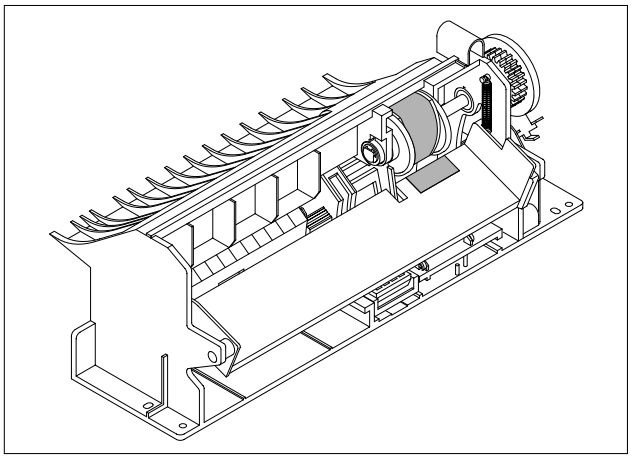

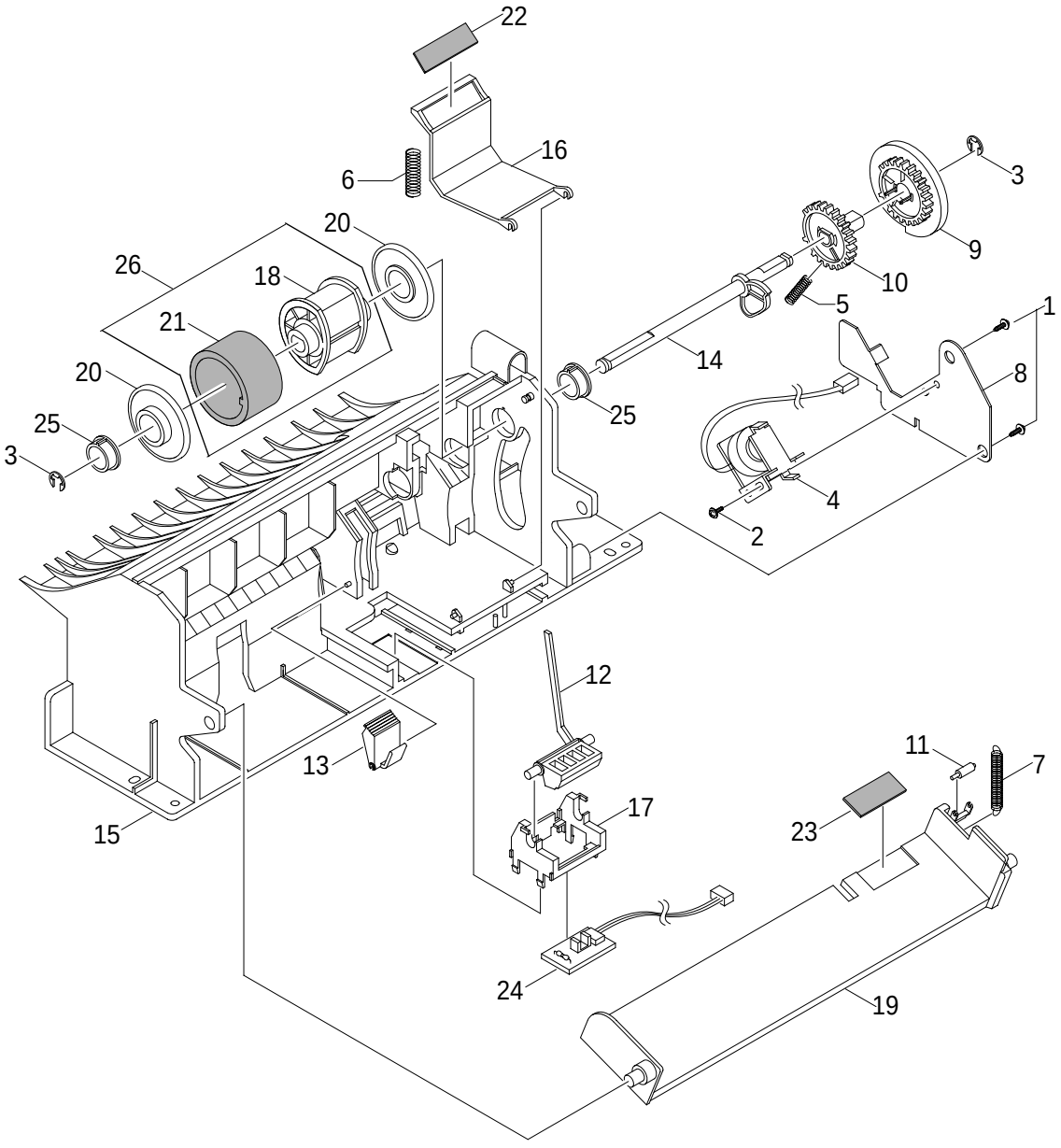

8.14 Base Frame

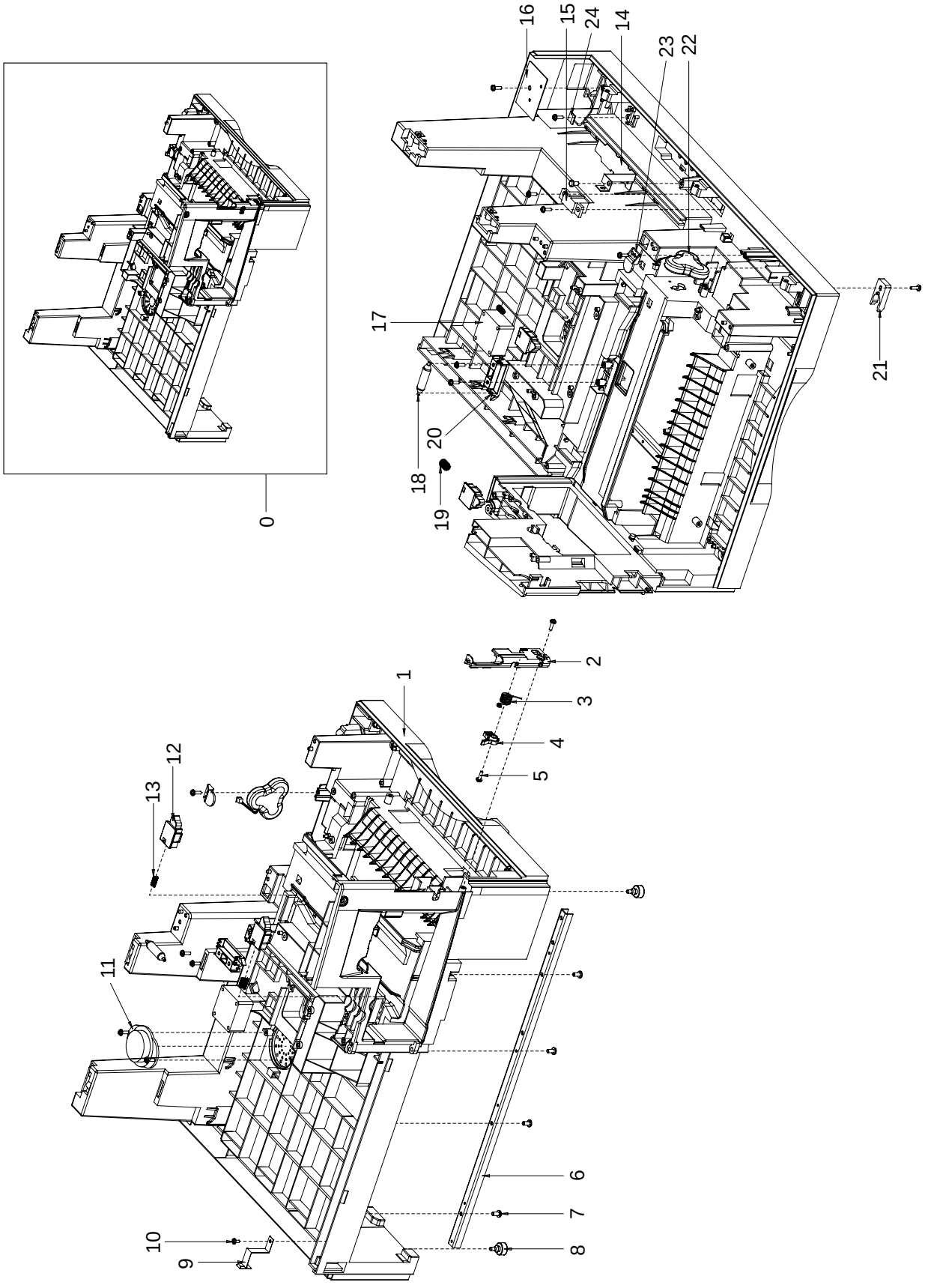

8.15 Pick-up Ass'y

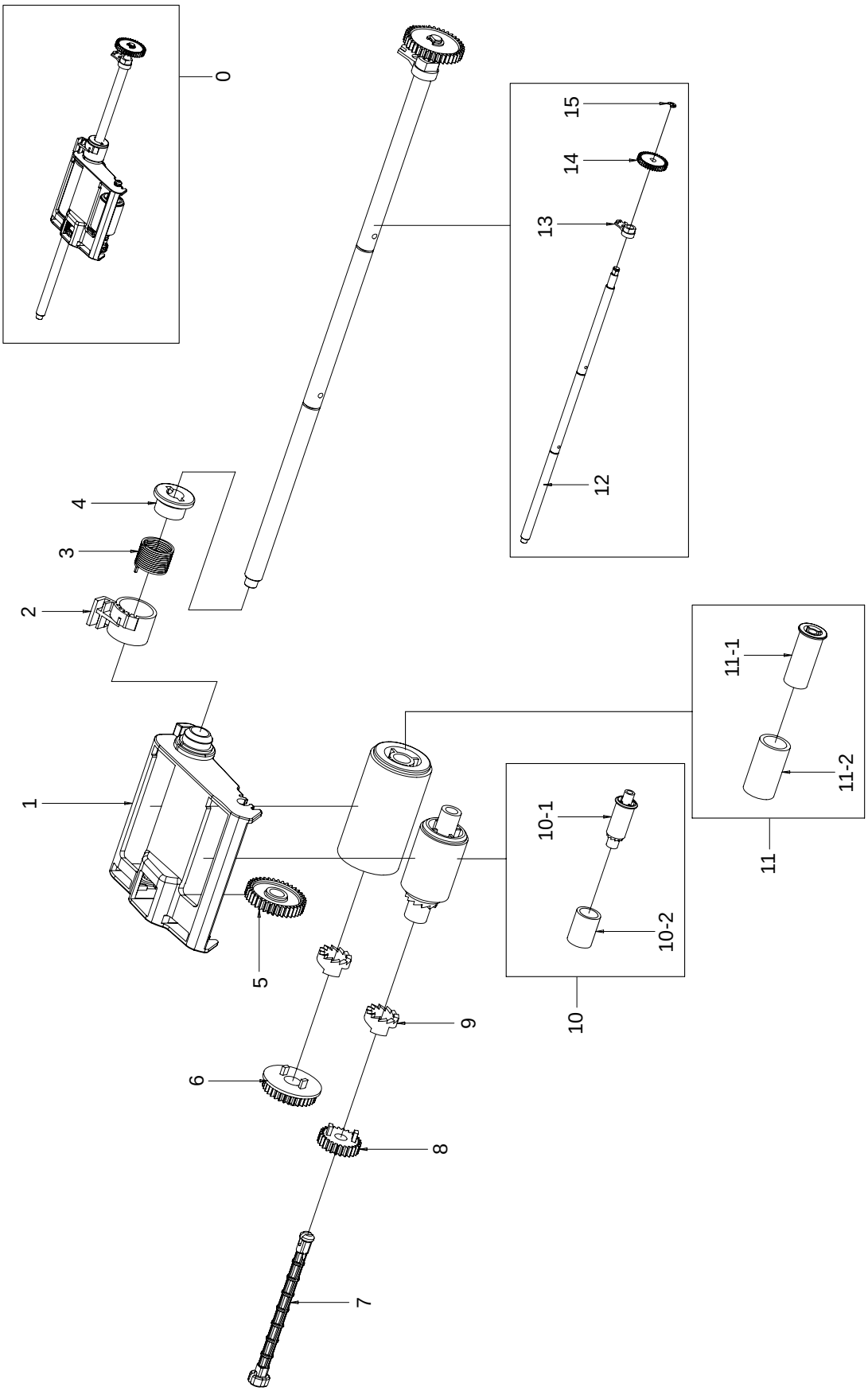

8.16 Drive Ass'y

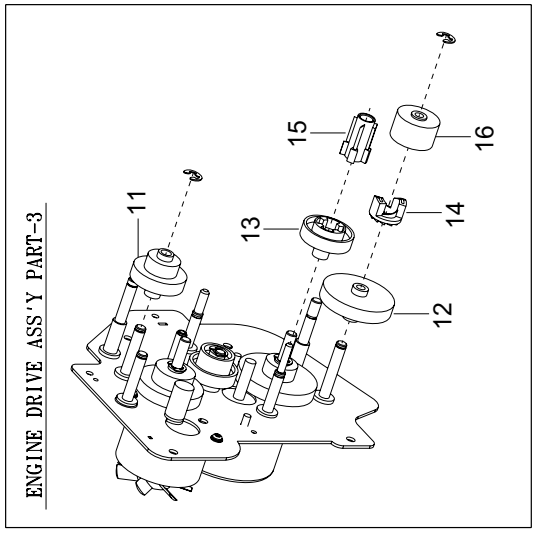

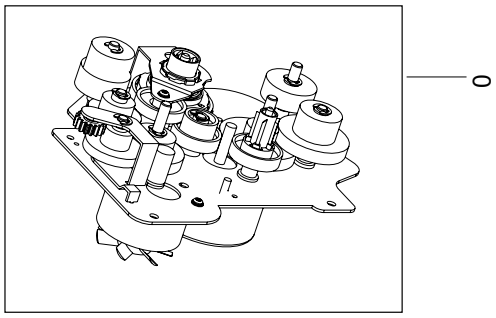

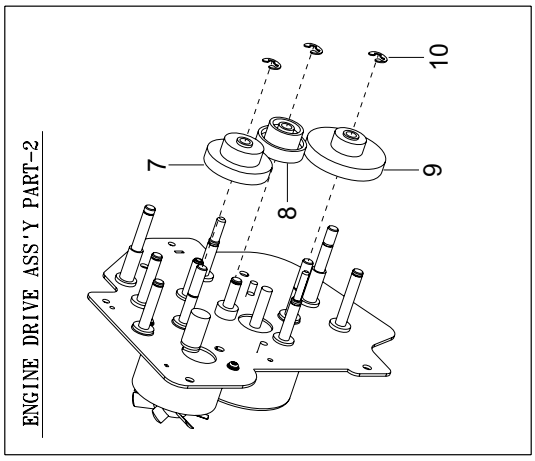

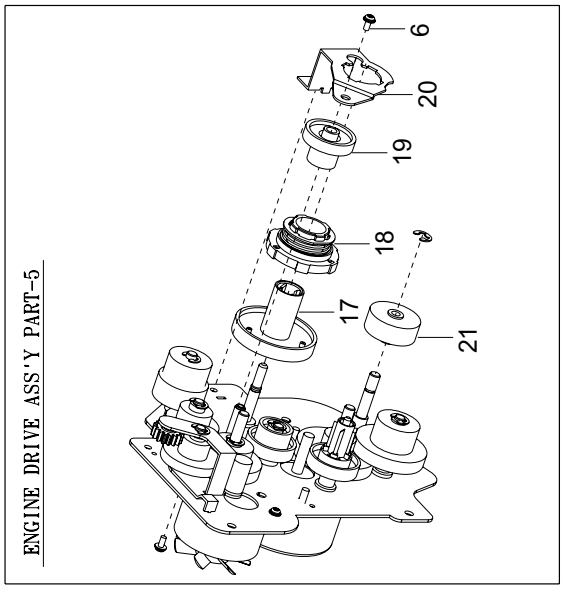

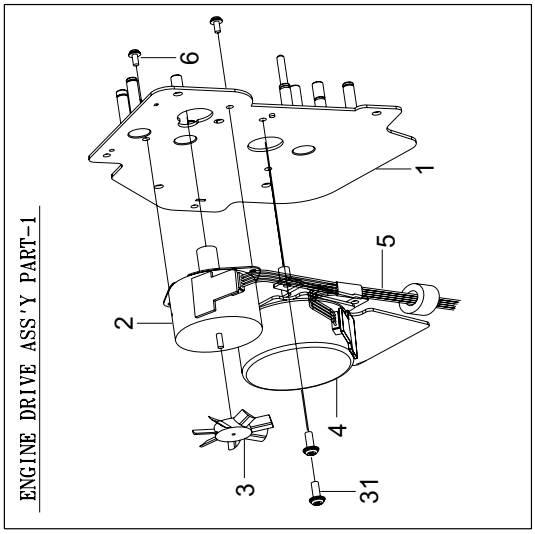

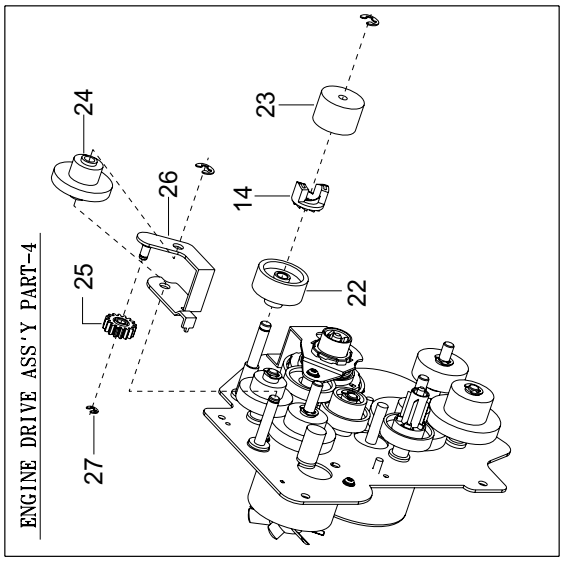

8.17 Main Frame Ass'y

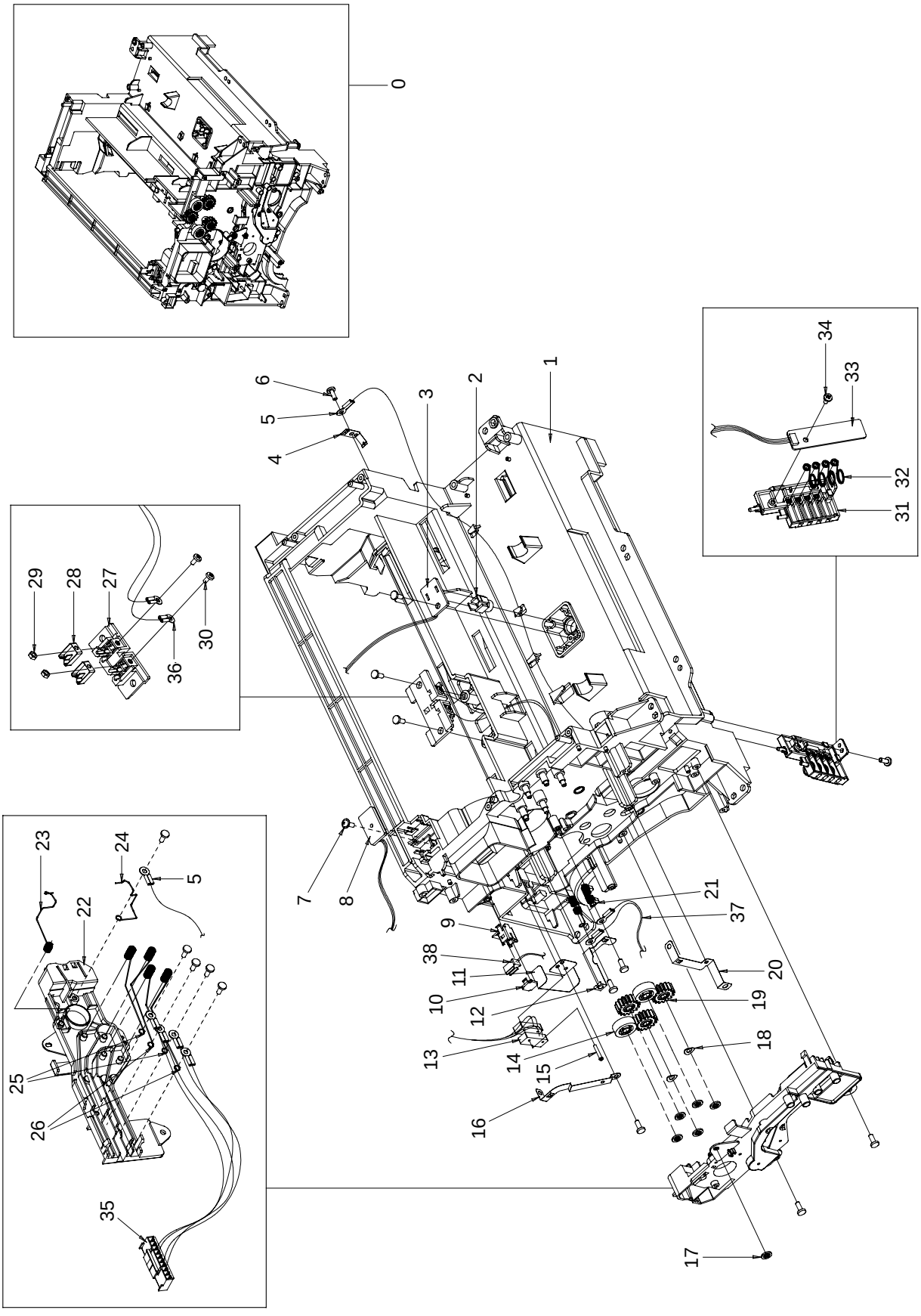

8.18 Fuser Ass'y

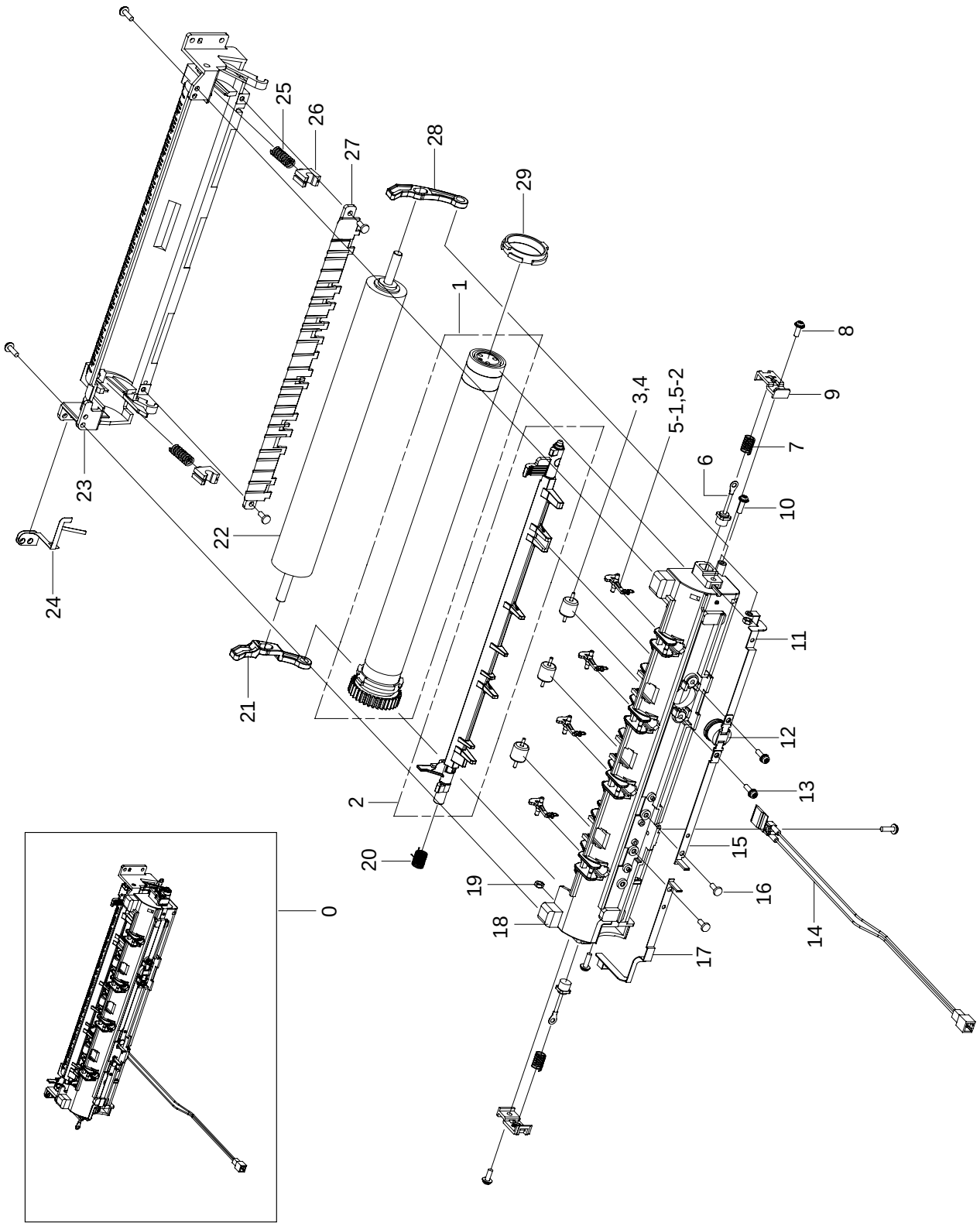

8.19 SCF Unit(Option Cassette)

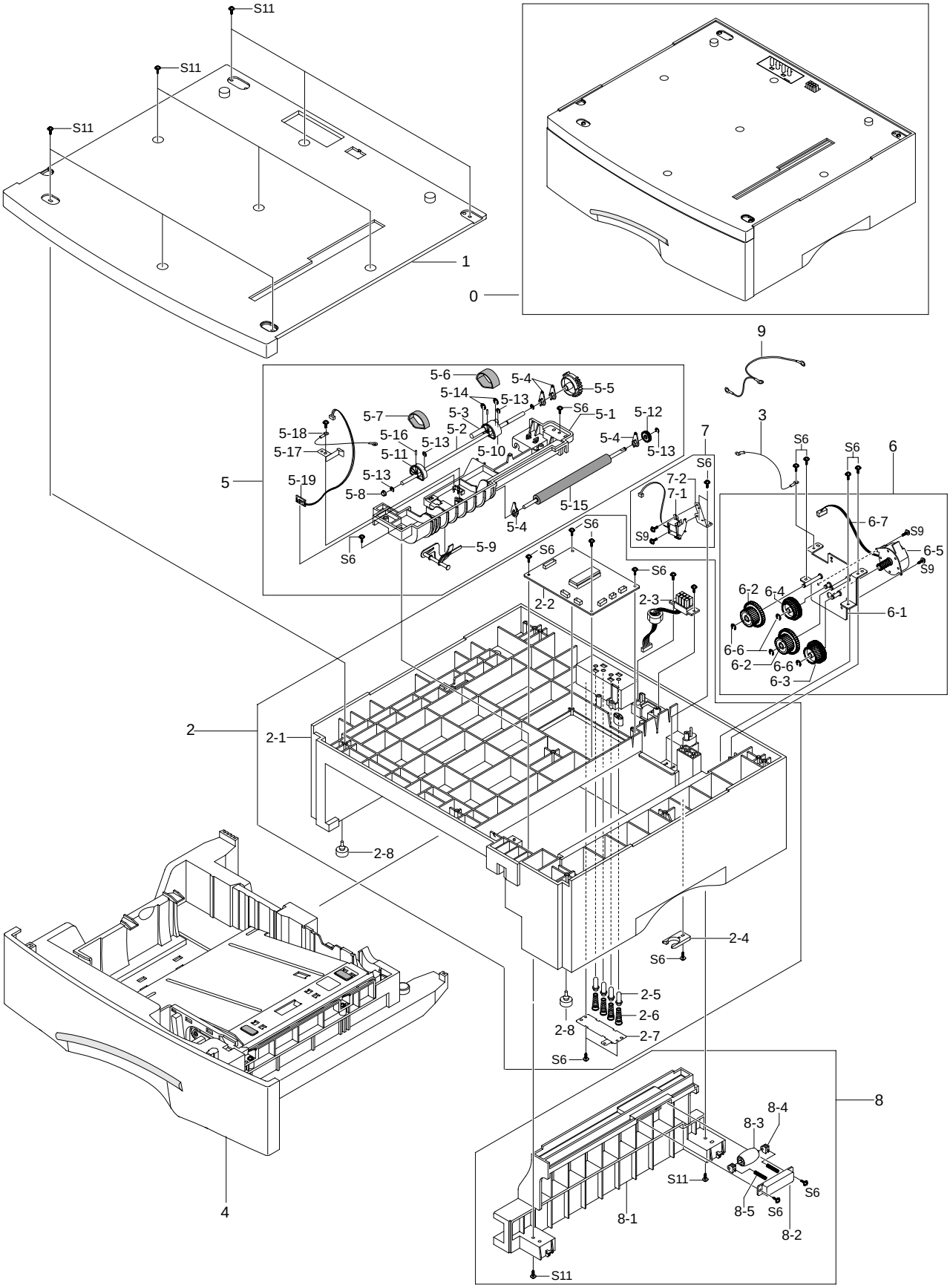

Service Parts List(SCX-6322DN/XAZ)

Service(SA:service available, SNA:service not avaialble)

Drawer#	Description	SEC_Code	QT'y	Service
8.1-0	22 PPM FLATBED MFP	SCX-6322DN/XAZ		
8.1-1-1	ELA HOU-SCANNER	JC96-04180X	1	SA
8.1-2	MEA UNIT-COVER PA EX	JC97-01556C	1	SA
8.1-2-1	PMO-TRAY EXT MP NE	JC72-00354D	1	SA
8.1-2-2	PMO-COVER PAPER EXIT	JC72-00786C	1	SA
8.1-3	MEA UNIT-CASSETTE	JC97-01736D	1	SA
8.1-4	MEA UNIT-COVER FRONT	JC97-01572C	1	SA
8.1-5	UNIT-LSU,600DPI,22	JC59-00014C	1	SA
8.1-6	ELA HOU-SHIELD SMPS	JC96-04178A	1	SA
8.1-7	PBA SUB-LIU	JC92-01793D	1	SA
8.1-8	SUPPORTER	6103-000101	2	SNA
8.1-9	ELA HOU-PICK UP PLUS	JC96-02715C	1	SA
8.1-10	ELA HOU-SIDE COVER	JC96-02183D	1	SA
8.1-11	ELA HOU-MP	JC96-02182B	1	SA
8.1-12	ELA HOU-BASE FRAME	JC96-04010C	1	SA
8.1-13	MEA UNIT-FEED ROLLER	JC97-01850A	1	SA
8.1-14	ELA HOU-FUSER E_COIL	JC96-03021C	1	SA
8.1-15	ELA HOU-FRAME MAIN	JC96-04012A	1	SA
8.1-16	MEA UNIT-EXIT	JC97-01643D	1	SA
8.1-17	ELA HOU-ENGINE DRIVE	JC96-04183A	1	SA
8.1-18	MEA UNIT-REAR COVER	JC97-01851D	1	SA
8.1-18-1	COVER-MAIN REAR DUMMY	JC63-00192C	1	SA
8.1-18-2	COVER-MAIN REAR	JC63-00191B	1	SA
8.1-19	PBA MAIN-CONTROLLER	JC92-01792D	1	SA
8.1-20	COVER-PANNEL MFP	JC63-01089C	1	SNA
8.1-21	ELA HOU-DUCT FAN	JC96-02311A	1	SA
8.1-21-1	FAN-DC	JC31-00012A	1	SA
8.1-21-2	PMO-DUCT FAN	JC72-00807A	1	SA
8.1-24	SOLENOID-PICK UP	JC33-00007A	1	SA
8.1-25	PMO-COVER EXIT REAR	JC72-00790B	1	SA
8.1-26	MEA UNIT-GUIDE CST PA	JC97-01624B	1	SA
8.1-26-1	PPR-SHEET/GUIDE PAPER	JC72-00836A	1	SA
8.1-26-2	PMO-GUIDE CST RAIL	JC72-00791B	1	SA
8.1-26-3	SHEET-FEED	JC63-00078A	2	SNA
8.1-26-4	IPR-GUIDE CASSETTE PAPER	JC70-00244A	1	SA
8.1-28	PMO-DUMMY BASE FRAME	JC72-00789B	1	SA
8.1-29	ELA HOU-SHIELD MAIN	JC96-04182A	1	SA
8.1-29-1	SHIELD-P_MAIN BOARD	JC63-01092A	1	SNA
8.1-29-2	HARNESS-INLET	JC39-00604A	1	SA
8.1-29-3	CBF HARNESS-LIU GND	JB39-00103A	1	SA
8.1-30	PMO-COVER FEED AY	JC72-00801A	1	SA
8.1-32	PMO-GUIDE PAPER OUT	JC72-00835B	1	SA
8.1-33	SHEET-CONNECTOR	JC63-00072A	1	SA
8.1-34	CBF HARNESS-LSU	JC39-00336A	1	SA
8.1-35	HARNESS-HVPS	JC39-00590A	1	SA
8.1-37	HARNESS-MAIN_MOTOR	JC39-00598B	1	SA
8.1-38	GEAR-PICK_UP	JC66-00335A	1	SA
8.1-39	IPR-SHIELD SMPS UPPER	JC70-00248A	1	SA
8.1-40	MEA UNIT-HOLD GND ASS'Y	JC97-01574A	1	SA
8.1-40-1	SPRING ETC-PLATE TR	JC61-70203A	1	SA
8.1-40-2	SPRING ETC-TR_L	JC61-70961A	1	SA

Service(SA:service available, SNA:service not avaialble)

Drawer#	Description	SEC_Code	QT'y	Service
8.1-40-3	PMO-BUSH	JC72-40228A	1	SA
8.1-40-4	PMO-HOLDER GND TR	JC72-00883A	1	SA
8.1-41	MEA UNIT-HOLD GEAR ASS'Y	JC97-01573A	1	SA
8.1-41-1	SPRING ETC-TR_R	JC61-70906A	1	SA
8.1-41-2	PMO-BUSH	JC72-40228A	1	SA
8.1-41-3	PMO-HOLDER GEAR TR	JC72-00884A	1	SA
8.1-44	PMO-CAM JAM REMOVE	JC72-00799A	1	SA
8.1-45	PMO-LOCKER DEVE	JC72-00805A	1	SA
8.1-46	PMO-LEVER JAM REMOVE	JC72-00804A	1	SA
8.1-47	HARNESS-POWER_SWITCH	JC39-00601C	1	SA
8.1-48	GEAR-TRANSFER	JC66-40947A	1	SA
8.1-49	PMO-BEARING SHAFT	JC72-41191A	1	SA
8.1-50	MEC-TRANSFER ROLLER	JC75-00148A	1	SA
8.1-51	PMO-COVER BRKT MOTER	JC72-00834A	1	SA
8.2-0	ELA HOU-SCANNER	JC96-04180X	1	SA
8.2-1	ELA HOU-DADF	JC96-02943B	1	SNA
8.2-2	ELA HOU-OPE	JC96-04170X	1	SNA
8.2-3	ELA HOU-PLATEN	JC96-04171A	1	SNA
8.3-0	ELA HOU-OPE	JC96-04170X	1	SNA
8.3-1	COVER-DUMMY	JC63-01155N	1	SNA
8.3-2	COVER-OPE	JC63-01156X	1	SA
8.3-3	KEY-M_STOP CLEAR	JC64-00242A	1	SNA
8.3-4	KEY-M_START BLACK	JC64-00243A	1	SNA
8.3-5	KEY-M_TEL	JC64-00239A	1	SNA
8.3-7	KEY-M_FAX	JC64-00241A	2	SNA
8.3-8	KEY-M_ON HOOK	JC64-00249A	1	SNA
8.3-9	KEY-M_MENU	JC64-00248A	1	SNA
8.3-10	LENS-STATUS	JC67-00198A	1	SNA
8.3-11	RUBBER-TEL	JC73-00246A	1	SA
8.3-12	RUBBER-MODE	JC73-00247A	1	SA
8.3-13	RUBBER-MENU	JC73-00230A	1	SNA
8.3-14	COVER-LCD	JC63-01157A	1	SNA
8.3-15	KEY-M_MODE SCAN	JC64-00247A	1	SNA
8.3-16	KEY-M_MODE COPY	JC64-00245A	1	SNA
8.3-17	KEY-M_MODE FAX	JC64-00246A	1	SNA
8.3-18	RUBBER-FAX	JC73-00248A	1	SA
8.3-19	RUBBER-EMAIL	JC73-00245A	1	SA
8.3-20	ELA UNIT-OPE	JC96-03994C	1	SA
8.3-21	PBA SUB-QWERTY	JC92-01791D	1	SA
8.3-23	SCREW-TAPTITE	6003-000154	17	SA
8.4-33	ELA HOU-SCAN UPPER	JC96-04034B	1	SA
8.4-33-1	PMO-COVER SCAN UPPER	JC72-00758B	1	SA
8.4-33-2	MEA UNIT-DUMMY UPPER	JC97-02800A	1	SA
8.4-33-2-1	PMO-DUMMY UPPER	JC72-00759D	1	SA
8.4-33-2-2	MCT-GLASS ADF	JC74-00019A	1	SA
8.4-33-2-4	SHEET-DUMMY UPPER	JC63-00074A	1	SA
8.4-33-3	SHEET ABS-REGI_EDGE	JC72-00809B	1	SA
8.4-33-4	SCREW-TAPTITE	6003-000154	2	SA
8.4-33-5	TAPE ETC-DOUBLE TAPE SMALL	JC02-00013A	3	SNA
8.4-33-6	TAPE ETC-DOUBLE TAPE LARGE	JC02-00012A	2	SNA
8.4-33-7	MCT-GLASS SCANNER(LEGAL)	JC74-00018A	1	SA
8.4-33-10	IPR-HOLDER GLASS	JB70-00148A	3	SA
8.4-34	ELA HOU-SCAN LOWER	JC96-04172A	1	SNA
8.4-34-1	COVER-SCAN LOWER	JC63-00157B	1	SNA
8.4-34-2	PMO-COVER DUMMY LOWER	JC72-00753B	1	SA
8.4-34-3	SCREW-TAPTITE	6003-000154	15	SA

Service(SA:service available, SNA:service not avaialble)

Drawer#	Description	SEC_Code	QT'y	Service
8.4-34-4	ICT-INSERT SHAFT	JB70-00154A	1	SNA
8.4-34-5	PMO-PULLEY	JB72-00763A	1	SA
8.4-34-6	PMO-HOLDER BELT	JB72-00764A	1	SA
8.4-34-7	RING-E	6044-000125	1	SA
8.4-34-8	ELA HOU-CCD MODULE	JC96-02759B	1	SA
8.4-34-9	BELT-TIMING GEAR	6602-001084	1	SA
8.4-34-11	HOLDER-M-CCD(UMAX)	JC61-00703A	1	SA
8.4-34-12	SPRING ETC-EXIT	JB61-70939A	1	SNA
8.4-34-13	IPR-BRK SCAN BD	JC70-00228A	1	SA
8.4-34-14	COVER-CCD CABLE	JC63-00158B	1	SNA
8.4-34-15	PMO-LEVER SENSOR	JC72-00755A	1	SA
8.4-34-16	SPRING ETC-BELT	JB61-00059A	1	SA
8.4-34-17	SCREW-TAPPING	6002-000175	3	SA
8.4-34-18	ELA HOU-SCAN MOTOR	JC96-02751A	1	SA
8.4-34-18-1	BRACKET-MOTOR PLATEN	JC61-00702A	1	SNA
8.4-34-18-2	SCREW-TAPTITE	6003-000154	2	SA
8.4-34-18-3	GEAR-IDLE	JB66-00083A	1	SA
8.4-34-18-4	GEAR-REDUCTION73/37	JC66-00530A	1	SA
8.4-34-18-5	GEAR-TIMING	JC66-00531A	1	SA
8.4-34-18-6	PMO-HOLDER BELT	JB72-00764A	1	SA
8.4-34-18-7	RING-E	6044-000125	2	SA
8.4-34-18-8	MOTOR STEP-SCAN	JB31-00011A	1	SA
8.4-34-19	CABLE CLAMP	6502-000132	1	SNA
8.4-34-21	SCREW-TAPTITE	6003-000154	8	SNA
8.4-34-22	CBF HARNESS-OPE	JC39-00340A	1	SA
8.4-34-23	CBF HARNESS-SCAN MOTOR	JB39-00077A	1	SA
8.4-34-24	CBF HARNESS-DRIVER GND	JB39-00065A	1	SNA
8.4-34-25	CBF SIGNAL-CCD FFC	JC39-00236A	1	SA
8.4-34-26	CBF HARNESS-SCAN_DSUB	JC39-00338A	1	SA
8.4-34-27	ELA UNIT-CORE	JB96-01381A	3	SA
8.4-34-28	SHAFT-CCD(UMAX)	JC66-00532A	1	SA
8.4-34-28	IPR-CHANNEL BASE FRAME	JC70-00239A	2	SA
8.6-0	ELA HOU-DADF	JC96-02943B	1	SNA
8.6-1	ELA HOU-COVER PLATEN	JC96-02942B	1	SA
8.6-2	COVER-FRONT	JC63-00200B	1	SA
8.6-3	COVER-REAR	JC63-00201B	1	SA
8.6-4	ELA HOU-DADF SUB	JC96-02973B	1	SNA
8.6-5	MEA UNIT-TX STACKER	JC97-01840B	1	SNA
8.6-5-1	PMO-TX STACKER	JC72-01253B	1	SA
8.6-5-2	GUIDE-DOC_LEFT	JC61-00739B	1	SNA
8.6-5-3	GUIDE-DOC_RIGHT	JC61-00740B	1	SNA
8.6-5-4	IPR-WASHER SPRING CU	JF70-10616A	1	SA
8.6-5-5	PMO-GEAR PINION	JF72-41354A	1	SA
8.6-5-6	PMO-ACTUATOR LENGTH	JC72-01250B	1	SA
8.6-5-7	PMO-TX STACKER LOWER	JC72-01254B	1	SA
8.6-5-8	SPRING ETC-TORSION DOC (CC2-F)	JB61-00076A	1	SA
8.7-0	ELA HOU-COVER PLATEN	JC96-02942B	1	SA
8.7-1	COVER-PLATEN	JC63-00198B	1	SNA
8.7-2	PMO-EXTENTION PLATEN	JC72-01251B	1	SNA
8.7-3	GUIDE-EXTENTION	JC61-00746B	1	SNA
8.7-4	PPR-SPONG SHEET	JC72-00751B	1	SA
8.7-5	PMO-ROLL PINCH	JG72-40663A	6	SA
8.7-6	IPR-P_PINCH(SCAN)	JC70-00468A	6	SNA
8.7-7	SHAFT-PINCH	JC66-00659A	2	SA
8.7-8	PMO-ACTUATOR SENSOR SCAN	JC72-00746A	1	SA
8.7-9	PBA SUB-GATE	JC92-01562A	1	SA

Service(SA:service available, SNA:service not avaialble)

Drawer#	Description	SEC_Code	QT'y	Service
8.7-10	MEA UNIT-HINGE(MCK2)	JC97-01839A	2	SA
8.7-11	PLATE-P-DUMMY PLATEN	JC61-00819A	1	SA
8.7-12	SPRING ETC-CHARGE	JC61-70925A	1	SNA
8.7-13	SPRING ETC-TORSION DOC (CC2-F)	JB61-00076A	1	SA
8.8-0	ELA HOU-DADF SUB	JC96-02973B	1	SNA
8.8-1	MEA UNIT-COVER OPEN	JC97-01844B	1	SA
8.8-1-1	COVER-OPEN	JC63-00195B	1	SA
8.8-1-2	PMO-STOPPER EXIT	JC72-41396B	1	SA
8.8-1-4	ROLLER-REGI	JC66-00587A	1	SNA
8.8-1-5	PMO-LEVER OPEN	JC72-01256B	1	SNA
8.8-1-6	SPRING ETC-KNOCKUP,MP	JC61-00483A	2	SA
8.8-1-7	PBA SUB-REGI	JC92-01561A	1	SA
8.8-1-8	PMO-ACTUATOR REGI	JC72-01261A	1	SNA
8.8-1-9	COVER-SENSOR	JC63-00197B	1	SA
8.8-1-10	SPRING ETC-TORSION DOC (CC2-F)	JB61-00076A	1	SA
8.8-1-11	BUSH-6_D	JC61-00423A	2	SA
8.8-1-12	RING-E	6044-000125	3	SA
8.8-1-13	GROUND-P DUPLEX	JC63-00315A	1	SNA
8.8-1-14	COVER-HARNESS	JC63-00408B	1	SNA
8.8-1-15	CBF HARNESS-LIU GND	JB39-00103A	1	SA
8.8-2	GUIDE-SCAN	JC61-00738B	1	SNA
8.8-3	GROUND-P_SCAN ROLLER	JC63-00249A	1	SNA
8.8-4	GROUND-P_EXIT ROLLER	JC63-00250A	1	SNA
8.8-5	PBA SUB-SENSOR_IF	JC92-01556A	1	SA
8.8-6	IPR-BRKT WHITE BAR	JC70-00225A	1	SA
8.8-7	SPRING ETC-WHITE BAR	JC61-00548A	2	SA
8.8-8	SHEET-GUIDE PAPER	JC63-00185A	1	SNA
8.8-9	ROLLER-EXIT	JC66-00588A	1	SA
8.8-10	GEAR-DADF_EXIT31	JC66-00571A	1	SA
8.8-11	MEA UNIT-COVER EXIT	JC97-01841B	1	SNA
8.8-11-1	COVER-EXIT	JC63-00196B	1	SNA
8.8-11-2	SPRING ETC-WHITE BAR	JC61-00548A	2	SA
8.8-11-3	PMO-ROLLER IDLE SCAN	JC72-00906A	3	SA
8.8-11-4	SHAFT-EXIT IDLE	JC66-00661A	1	SA
8.8-11-5	TAPE ETC-ANTI BRUSH	JC02-00014A	1	SNA
8.8-11-6	GROUND-P-EXIT COVER	JC63-00203A	1	SNA
8.8-12	ROLLER-SCAN	JC66-00585A	2	SA
8.8-13	PMO-BUSHING HOLDER	JG72-40732A	2	SNA
8.8-14	SPRING ETC-CLUTCH	JB61-70922A	2	SA
8.8-15	GEAR-DADF_SCAN31	JC66-00570A	2	SA
8.8-16	MEA UNIT-PICK_UP	JC97-01848A	1	SA
8.8-17	MEP-CLUTCH SMALL	JC47-00003C	3	SA
8.8-18	ELA HOU-DUPLEX MOTOR	JC96-02940A	1	SA
8.8-19	MOTOR STEP-DUPLEX	JC31-00034A	1	SA
8.8-20	IPR-GUARD C/O S/W	JC70-00218A	1	SA
8.8-21	CBF HARNESS-COVER_OPEN	JC39-00332A	1	SA
8.8-22	MOTOR STEP-DADF	JC31-00033A	1	SA
8.8-23	ELA HOU-DADF MOTOR	JC96-02941A	1	SA
8.8-24	COVER-P GEAR	JC63-00307A	1	SA
8.8-26	GEAR-DADF24(A)	JC66-00565A	1	SA
8.8-27	PMO-GATE DUPLEX	JC72-01255A	1	SA
8.8-28	PBA SUB-DADF	JC92-01554B	1	SA
8.8-29	CBF HARNESS-CLUTCH_IF	JC39-00327A	1	SA
8.8-30	CBF D SUB CABLE-DADF	JC39-00359A	1	SA
8.8-31	PMO-ACTUATOR SCAN	JC72-01249A	1	SA
8.8-32	PMO-ACTUATOR DUPLEX	JC72-01263A	1	SA

Service(SA:service available, SNA:service not avaialble)

Drawer#	Description	SEC_Code	QT'y	Service
8.8-33	CBF HARNESS-DADF_GND	JC39-00334A	1	SA
8.8-34	ROLLER-DUPLEX	JC66-00589A	1	SA
8.8-36	GUIDE-DUPLEX_INNER	JC61-00737B	1	SA
8.8-37	GUIDE-DUPLEX_LOWER	JC61-00735B	1	SA
8.8-38	MEA UNIT-GUIDE DUPLEX	JC97-01843A	1	SA
8.8-39	MEA UNIT-GUIDE_P UP	JC97-01847B	1	SA
8.8-39-1	GUIDE-PICK_UP_UPPER	JC61-00733B	1	SNA
8.8-39-2	MEA UNIT-HOLDER RUB	JC97-01846B	1	SA
8.8-39-3	PBA SUB-PAPER SEN	JC92-01783A	1	SNA
8.8-39-4	PBA SUB-EXIT_OPEN	JC92-01564A	1	SA
8.8-39-5	PMO-ACTUATOR DOC	JC72-01248A	2	SA
8.8-39-6	GUIDE-PICK_UP_LOWER	JC61-00732B	1	SNA
8.8-39-7	SPRING ETC-TORSION DOC (CC2-F)	JB61-00076A	2	SA
8.8-40	MEA UNIT-SUPPORT P UP	JC97-01845B	1	SA
8.8-40-1	SUPPORT-PICK UP	JC61-00742B	1	SNA
8.8-40-2	SPRING ETC-PICKUP	JC61-00482A	1	SA
8.8-40-3	GUIDE-DOC SENSOR	JC61-00788B	2	SNA
8.8-41	BUSH-10_D	JC61-00720A	2	SNA
8.8-42	BUSH-6_D	JC61-00423A	8	SA
8.8-43	BUSH-6_D(L)	JC61-00884A	2	SNA
8.8-44	SHAFT-GATE_DUPLEX	JC66-00683A	1	SNA
8.8-45	SHAFT-REGI	JC66-00662A	1	SA
8.8-46	CBF HARNESS-SENSOR_IF	JC39-00344A	1	SA
8.9-0	ELA HOU-SIDE COVER	JC96-02183D	1	SA
8.9-1	MEA UNIT-DUPLEX	JC97-01578B	1	SA
8.9-1-1	IPR-E-PLATE SAW(MCK2)	JC70-10232D	1	SA
8.9-1-2	IPR-BRACKET GUIDE B	JC70-00234A	1	SA
8.9-1-3	PMO-HOLDER SAW	JC72-41213B	1	SNA
8.9-1-4	IPR-BRACKET GUIDE A	JC70-00229A	1	SA
8.9-1-5	PMO-FEED FRAME	JC72-00731A	1	SA
8.9-1-6	SPRING ETC-FEED	JC61-00478A	2	SA
8.9-1-7	PMO-BUSHING FEED	JC72-00730A	1	SA
8.9-1-8	GEAR-DUP IDLER 17	JC66-00341A	3	SA
8.9-1-9	GEAR-MP/DUP DRV	JC66-00346A	1	SA
8.9-1-10	RING-CS	6044-000001	2	SNA
8.9-1-11	IPR-BRKT GROUND TR	JC70-00231A	1	SA
8.9-1-12	PMO-BUSHING TX(B4)	JG72-40744A	4	SA
8.9-1-13	IPR-BRKT GROUND A	JC70-00232A	1	SA
8.9-1-13	PMO-SHAFT DUP DRIVER	JC72-00764A	2	SA
8.9-1-14	RPR-RUBBER EXIT	JC73-10203A	2	SA
8.9-1-15	IPR-BRKT G DUP	JC70-00233A	1	SA
8.9-1-16	PMO-GP LOWER DP	JC72-00732A	1	SA
8.9-1-17	PMO-ROLLER_EXIT	JC72-40361A	2	SNA
8.9-1-18	SPRING ETC-FUSER EXIT	JC61-70976A	2	SNA
8.9-1-19	CBF HARNESS-OPE GND	JC39-00036A	1	SA
8.9-1-20	IPR-BRKT GROUND B	JC70-00230A	1	SA
8.9-2	MEA UNIT-SIDE SUB	JC97-01909B	1	SA
8.9-2-1	PMO-GUIDE DP SIDE	JC72-00806A	1	SA
8.9-2-2	GUIDE-SIDE_PUSH	JC61-00919B	1	SNA
8.9-2-3	PMO-LOCKER OPEN	JC72-00762D	1	SA
8.9-2-5	PMO-LOCKER SIDE R	JC72-00763C	1	SA
8.9-2-6	SPRING ETC-LOCKER TORSION	JC61-00479A	1	SA
8.9-2-7	PMO-TIE STOPPER	JC72-00766A	2	SA
8.9-2-8	MEA UNIT-TRAY	JC97-01577C	1	SA
8.9-2-8-1	PMO-TRAY CASE MP	JC72-00776B	1	SA
8.9-2-8-2	PMO-TRAY EXT MP	JC72-00778D	1	SA

Service(SA:service available, SNA:service not avaialble)

Drawer#	Description	SEC_Code	QT'y	Service
8.9-2-8-3	PMO-SIDE GUIDE MP	JC72-00547A	1	SA
8.9-2-8-4	PMO-TRAY COVER MP	JC72-00777D	1	SA
8.9-2-8-5	IPR-GUIDE LATCH	JB70-10906A	1	SA
8.9-2-8-6	PMO-TRAY LINK MP	JC72-00857C	2	SA
8.10-1	PMO-IMPACT CASSETTE	JC72-00877C	1	SA
8.10-2	PLATE-P_GUIDE PAPER	JC61-00831A	2	SA
8.10-3	IPR-PLATE K/UP	JC70-00221A	1	SA
8.10-5	PMO-COVER CASSETTE	JC72-00795B	1	SA
8.10-6	PMO-FRAME CASSETTE	JC72-00716B	1	SA
8.10-7	GUIDE-FRONT CST PLUS	JC61-00825C	1	SNA
8.10-8	PMO-GUIDE REAR	JC72-00717C	1	SA
8.10-9	GUIDE-P-SIDE CST	JC61-00826A	1	SA
8.10-10	PMO-LOCKER PLATE	JC72-41210A	1	SA
8.10-11	PAD-CST PLUS	JC69-00474A	2	SA
8.10-12	SPRING ETC-LOCKER,PLATE	JG61-70531A	1	SA
8.10-13	SPRING-CS	6107-001172	1	SA
8.10-14	SPRING-CS	6107-001172	1	SA
8.10-17	GUIDE-SIDE HANDLE	JC61-00824C	1	SNA
8.10-18	IPR-P-FINGER LEFT	JC70-00325A	1	SA
8.10-19	BUSH-M-FINGER,F	JC61-00653A	2	SA
8.10-20	WASHER-PLAIN	6031-000021	2	SA
8.10-21	SPRING ETC-WHITE BAR	JC61-00548A	1	SA
8.10-22	GUIDE-SUB WALL	JC61-00840B	1	SNA
8.11-0	MEA UNIT-EXIT	JC97-01643D	1	SA
8.11-2	PMO-GUIDE-EXIT LOWER	JC72-00710A	1	SA
8.11-3	SPRING ETC-EXIT LOWER IDLE	JC61-00484A	4	SA
8.11-4	HOLDER-EXIT(MC)	JC61-00547A	4	SNA
8.11-5	PMO-ROLLER FD F	JC72-41007A	4	SA
8.11-6	PMO-ROLLER FD R	JC72-41008A	4	SA
8.11-7	SPRING ETC-EXIT ROLL FD	JC61-70911A	2	SA
8.11-8	SHAFT-IDLE_LOWER	JC66-00715A	1	SNA
8.11-9	PMO-ROLLER_EXIT	JC72-40361A	4	SNA
8.11-10	PMO-GUIDE_EXIT UPPER	JC72-00708B	1	SA
8.11-11	MEC-ROLLER EXIT DRIVE	JC75-00166A	2	SA
8.11-12	PMO-BEARING LARGE DP	JC72-00885A	2	SA
8.11-13	PMO-ROLLER DECURL	JC72-00833A	4	SA
8.11-14	PMO-BUSHING DP	JC72-01345A	1	SNA
8.11-15	PMO-BEARING LARGE DP	JC72-00885A	1	SA
8.11-16	PMO-HOLDER PAD,MP	JC72-00771A	1	SA
8.11-16	GEAR-DUPLEX	JC66-40912A	1	SA
8.11-17	PMO-PULLEY DUPLEX	JC72-40980A	2	SA
8.11-18	RING-C	6044-000159	4	SA
8.11-19	BELT-TIMING GEAR	6602-001084	1	SA
8.11-20	IPR-GROUND-EXIT	JC70-00252A	1	SA
8.11-21	PMO-LEVER_STACKING	JC72-00709B	1	SA
8.11-22	MEC-BRUSH ANTISTATIC	JC75-00095A	1	SA
8.11-23	SCREW-TAPTITE	6003-000154	3	SA
8.11-24	PBA SUB-BIN_FULL_SEN	JC92-01400B	1	SA
8.12-0	MEA UNIT-FEED ROLLER	JC97-01850A	1	SA
8.12-1	PMO-FRAME FEED	JC72-00821A	1	SA
8.12-3	GEAR-MP/DUP DRV	JC66-00346A	1	SA
8.12-4	ICT-SHAFT FEED	JC70-00267A	1	SNA
8.12-5	PMO-BUSHING_P/U,MP	JC72-41364A	2	SA
8.12-6	RING-E	6044-000125	2	SA
8.12-7	RING-CS	6044-000001	1	SNA
8.12-8	BRACKET-PM_FEED(25)	JC61-00849A	1	SNA

Service(SA:service available, SNA:service not avaialble)

Drawer#	Description	SEC_Code	QT'y	Service
8.12-9	PMO-ROLLER FEED	JC72-00727A	1	SA
8.12-11	PMO-HOLDER PINCH SUB	JC72-00725A	1	SA
8.12-12	PMO-ROLLER FEED L	JC72-40261A	1	SA
8.12-13	HOLDER-PUSH_FEED_CST	JC61-00871A	1	SNA
8.12-14	PMO-HOLDER PINCH M	JC72-00724A	1	SA
8.12-15	PMO-SUB HOLDER FEED	JC72-40266A	1	SA
8.12-16	SPRING ETC-FEED MP	JC61-00481A	1	SA
8.12-17	WASHER-PLAIN	6031-000021	3	SNA
8.12-18	PMO-ROLLER FEED S	JC72-40262A	1	SA
8.12-19	IPR-SHAFT FEED IDLER	JC70-10230A	4	SA
8.12-20	SHEET-FEEDER	JC63-00259A	1	SNA
8.12-21	PMO-ROLLER PINCH FEED	JC72-01315A	2	SNA
8.12-22	RING-C	6044-000159	2	SA
8.13-0	ELA HOU-MP	JC96-02182B	1	SA
8.13-2	SCREW-TAPTITE	6003-000154	1	SNA
8.13-3	RING-E	6044-000125	2	SA
8.13-5	SPRING ETC--CAM MP	JC61-00003A	1	SA
8.13-7	SPRING ETC-KNOCKUP,MP	JC61-00483A	1	SA
8.13-8	IPR-BRACKET SOLENOIDE	JC70-00237A	1	SA
8.13-9	PMO-HOLDER CAM MPF	JC72-00055A	1	SNA
8.13-10	PMO-GEAR P/U MPF	JC72-00056A	1	SA
8.13-11	PMO-ROLLER CAM.MP	JC72-00761A	1	SA
8.13-12	PMO-ACTUATOR,MP	JC72-00767A	1	SA
8.13-13	PMO-ADJUSTER,MP	JC72-00768A	1	SA
8.13-14	PMO-CAM PICK UP,MP	JC72-00769A	1	SA
8.13-15	PMO-FRAME MP	JC72-00770B	1	SA
8.13-17	PMO-HOLDER SENSOR,MP	JC72-00772A	1	SA
8.13-18	PMO-HOUSING PICK UP,MP	JC72-00773A	1	SA
8.13-19	PMO-PLATE KNOCK UP,MP	JC72-00775A	1	SA
8.13-20	PMO-IDLE PICK UP MP	JC72-41027A	2	SA
8.13-21	RPR-RUBBER PICK UP,MP	JC73-00089A	1	SA
8.13-22	RPR-RCT PAD PICKUP,MP	JC73-00090A	1	SA
8.13-23	PAD-MP(PLUS)	JC69-00494A	1	SA
8.13-24	PBA SUB-MP SEN	JC92-01362A	1	SA
8.13-25	PMO-BUSHING_P/U,MP	JC72-41364A	2	SA
8.14-0	ELA HOU-BASE FRAME	JC96-04010C	1	SA
8.14-1	PMO-BASE FRAME	JC72-00779B	1	SA
8.14-2	PMO-COVER FRONT DUMMY	JC72-00785B	1	SA
8.14-3	SPRING ETC-TORSION	JC61-00486A	1	SA
8.14-5	SCREW-TAPTITE	6003-000154	12	SA
8.14-6	IPR-CHANNEL BASE FRAME	JC70-00239A	1	SA
8.14-7	SCREW-TAPTITE	6003-000154	5	SNA
8.14-8	FOOT-ML80	JC61-40001A	2	SA
8.14-9	IPR-GROUND PLATE B(BASE)	JC70-00241A	1	SA
8.14-10	SCREW-TAPTITE	6003-000154	1	SA
8.14-11	ELA M/M-AUD SPEAKER	JC96-01607A	1	SA
8.14-12	BRACKET-M-PUSH DEVE	JC61-00789A	2	SNA
8.14-13	SPRING ETC-DEVE REAR	JC61-00550A	1	SA
8.14-14	IPR-GROUND PLATE SCF	JC70-00243A	1	SA
8.14-15	CBF HARNESS-SCF	JC39-00082A	1	SA
8.14-17	FAN-DC CARDINAL	JC31-00027B	1	SA
8.14-18	SHAFT-DEVE_BOTTOM	JC66-00684A	1	SNA
8.14-19	SPRING ETC-DEVE FRONT	JC61-00551A	1	SA
8.14-20	HOLDER-M_ROLLER BOTTOM	JC61-00855A	1	SNA
8.14-21	HOLDER-CATCH CST(MC2)	JC61-00857A	1	SNA
8.14-22	BATTERY-NIH(2ND)	4302-001183	1	SA

Service(SA:service available, SNA:service not avaialble)

Drawer#	Description	SEC_Code	QT'y	Service
8.14-23	STOPPER-M-FAN80	JC61-00667A	1	SA
8.14-24	PBA SUB-AIR_TMP	JC92-01568A	1	SA
8.15-0	ELA HOU-PICK UP PLUS	JC96-02715C	1	SA
8.15-1	IPR-GND FEED	JC70-00238A	1	SA
8.15-2	IPR-GND INPUT	JC70-00235A	1	SA
8.15-3	IPR-GUIDE INPUT	JC70-00222A	1	SA
8.15-4	PMO-M-ACTUATOR_NO PAPER	JC72-01313A	1	SA
8.15-6	PBA SUB-PTL	JC92-01361A	1	SA
8.15-7	PMO-FEED SENSOR	JC72-00721A	1	SA
8.15-8	PMO-GUIDE PAPER	JC72-00722B	1	SA
8.15-9	PMO-HOLDER SENSOR FEED	JC72-00726A	1	SA
8.15-10	PMO-LENS TONER SENSOR	JC72-00803A	1	SA
8.15-11	PMO-PTL PATH	JC72-00822A	1	SA
8.15-13	PMO-BUSHING_P/U,MP	JC72-41364A	1	SA
8.15-14	HOUSING-M-PICKUP LARGE	JC61-00822A	1	SNA
8.15-15	HOUSING-M-PICKUP SMALL	JC61-00823A	1	SNA
8.16-0	ELA HOU-ENGINE DRIVE	JC96-04183A	1	SA
8.16-2	MOTOR STEP-MCK2(MAIN)	JC31-00020C	1	SA
8.16-3	PMO-IMPELLER_DRV	JC72-00825A	1	SA
8.16-7	GEAR-71/23	JC66-00345A	1	SA
8.16-8	GEAR-OPC53/37	JC66-00580A	1	SNA
8.16-9	GEAR-86/23	JC66-00337A	1	SA
8.16-11	GEAR-31/19	JC66-00350A	1	SA
8.16-12	GEAR-RDCN FEED INNER	JC66-00342A	1	SA
8.16-13	GEAR-DEVE DRV	JC66-00338A	1	SA
8.16-14	GEAR-HUB CLUTCH	JC66-00340A	2	SA
8.16-15	PMO-DEV/COUPLING	JC72-00743A	1	SA
8.16-16	GEAR-RDCN FEED OUTER	JC66-00343A	1	SA
8.16-17	GEAR-OPC DRV	JC66-00347A	1	SA
8.16-18	MEC-BRAKE GEAR	JC75-00163A	1	SNA
8.16-19	GEAR-OPC 55/31	JC66-00581A	1	SNA
8.16-20	BRACKET-P-BRAKE	JC61-00853A	1	SNA
8.16-21	GEAR-FEED DRV	JC66-00348A	1	SA
8.16-22	GEAR-FUSER DRV INNER	JC66-00333A	1	SA
8.16-23	GEAR-GEAR FUSER DRV OUTER	JC66-00334A	1	SA
8.16-24	GEAR-SWING DRV	JC66-00349A	1	SA
8.16-25	GEAR-EXIT/U,ID	JC66-40211B	1	SA
8.16-26	LINK-P-DUPLEX	JC66-00576A	1	SNA
8.16-27	RING-C	6044-000159	1	SA
8.17-0	ELA HOU-FRAME MAIN	JC96-04012A	1	SA
8.17-1	PMO-FRAME MAIN	JC72-00800A	1	SA
8.17-2	PMO-LENS TONER SENSOR	JC72-00803A	1	SA
8.17-3	PBA SUB-TONER_RX	JC92-01360B	1	SA
8.17-4	IPR-GND OPC	JC70-00216A	1	SA
8.17-5	HARNESS-OPC GND	JC39-00592A	2	SA
8.17-7	SCREW-TAPPING	6002-000175	1	SA
8.17-9	PMO-CAP CONNECTOR L	JC72-00463A	1	SA
8.17-10	PMO-CAP CONNECTOR U	JC72-00465A	1	SA
8.17-11	IPR-GUARD C/O S/W	JC70-00218A	1	SA
8.17-12	IPR-GND TERMINAL	JC70-00219A	1	SA
8.17-13	CBF HARNESS-COVER_SW	JC39-00360A	1	SA
8.17-14	GEAR-EXIT,IDLE(Z17)	JC66-40964A	2	SA
8.17-15	SCREW-TAPTITE	6003-000154	1	SNA
8.17-16	GROUND-P-FUSER_MC2	JC63-00409A	1	SNA
8.17-17	RING-CS	6044-000001	6	SNA
8.17-18	SPRING ETC-CLUTCH	JB61-70922A	2	SA

Service(SA:service available, SNA:service not avaialble)

Drawer#	Description	SEC_Code	QT'y	Service
8.17-19	GEAR-EXIT/U,ID	JC66-40211B	3	SA
8.17-20	IPR-GND EXIT	JC70-00214A	1	SA
8.17-21	IPR-TERMINAL OPC	JC70-00298A	2	SNA
8.17-22	HOUSING-M-TERMINAL	JC61-00723A	1	SA
8.17-23	IPR-TERMINAL GND	JC70-00272A	1	SA
8.17-24	IPR-TERMINAL TR	JC70-00271A	1	SA
8.17-25	IPR-TERMINAL BLADE	JC70-00269A	2	SA
8.17-26	IPR-TERMINAL SUPPLY	JC70-00270A	2	SA
8.17-27	PMO-HOUSING TERMINAL	JC72-41010A	1	SA
8.17-28	IPR-TERMINAL FU	JC70-10961A	2	SA
8.17-29	NUT-HEXAGON	6021-000222	2	SNA
8.17-30	SCREW-MACHINE	6001-000568	2	SNA
8.17-36	HARNESS-FUSER	JC39-00600B	1	SA
8.17-37	HARNESS-OPC_FUSER	JC39-00593A	1	SA
8.17-38	CBF HARNESS-THERM	JC39-00377A	1	SA
8.17-38	HARNESS-H_VOLTAGE	JC39-00589A	1	SA
8.18-0	ELA HOU-FUSER E_COIL	JC96-03021C	1	SA
8.18-1	ELA UNIT-HEAT ROLLER	JC96-03020C	1	SNA
8.18-2	MEA UNIT-ACTUATOR	JC97-01611B	1	SA
8.18-3	PEX-ROLLER F/UP(2)	JC72-20902A	3	SA
8.18-4	IPR-PIN ROLLER EXIT	JC70-00064A	3	SNA
8.18-5	MEA UNIT-CLAW	JC97-01587B	4	SA
8.18-5-1	SPRING ETC-SAPERATION	JC61-70909A	1	SA
8.18-5-2	PMO-GUIDE CLAW	JC72-00376B	1	SA
8.18-6	BRUSH-CARBON	JC67-00067A	2	SA
8.18-7	SPRING-CS	6107-001172	2	SA
8.18-8	SCREW-MACHINE	6001-000568	2	SNA
8.18-9	COVER-M-BRUSH	JC63-00353A	2	SNA
8.18-10	SCREW-TAPTITE	6003-000154	5	SA
8.18-11	ELECTRODE-P-FRONT	JC70-00469A	1	SNA
8.18-12	THERMOSTAT	4712-001027	1	SA
8.18-13	SCREW-MACHINE	6001-000568	2	SA
8.18-14	THERMISTOR-NTC	1404-001340	1	SA
8.18-15	NPR-ELECTRODE M	JC71-00030A	1	SA
8.18-16	SCREW-TAPTITE	6003-000154	4	SNA
8.18-17	ELECTRODE-P-GEAR	JC70-00470A	1	SNA
8.18-18	PMO-UPPER FUSER	JC72-01318A	1	SNA
8.18-19	NUT-HEXAGON	6021-000222	2	SNA
8.18-20	SPRING ETC-ACTUATOR6G	JC61-00485A	1	SA
8.18-21	LEVER-M-JAM R	JC66-00679A	1	SNA
8.18-22	ROLLER-PRESSURE	JC66-00691A	1	SNA
8.18-23	PMO-LOWER FUSER	JC72-01316A	1	SNA
8.18-24	IPR-GROUND FU	JC70-00259A	1	SA
8.18-25	SPRING ETC-PR(7300)	JC61-00056A	2	SA
8.18-26	BUSH	JC66-10901A	2	SA
8.18-27	PMO-GUIDE INPUT	JC72-00817A	1	SA
8.18-28	LEVER-M-JAM F	JC66-00678A	1	SNA
8.18-29	BUSH-HEAT ROLLER	JC61-01702A	1	SNA
Replacement	BOX-MAIN	JC69-01018E	1	SA
Replacement	CBF-POWER CORD	3903-000020	1	SA

8. Block Diagram

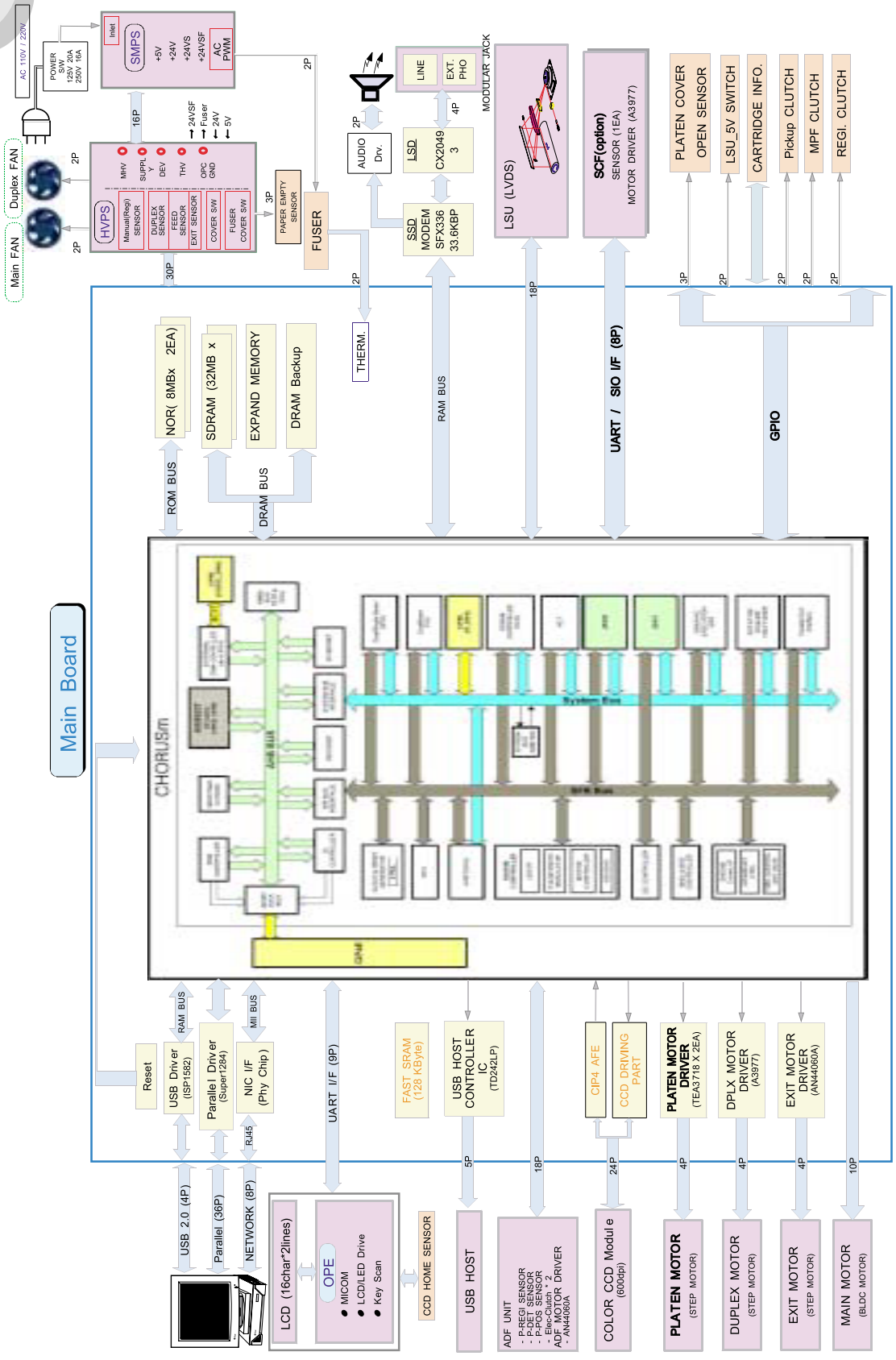

9. Connection Diagram

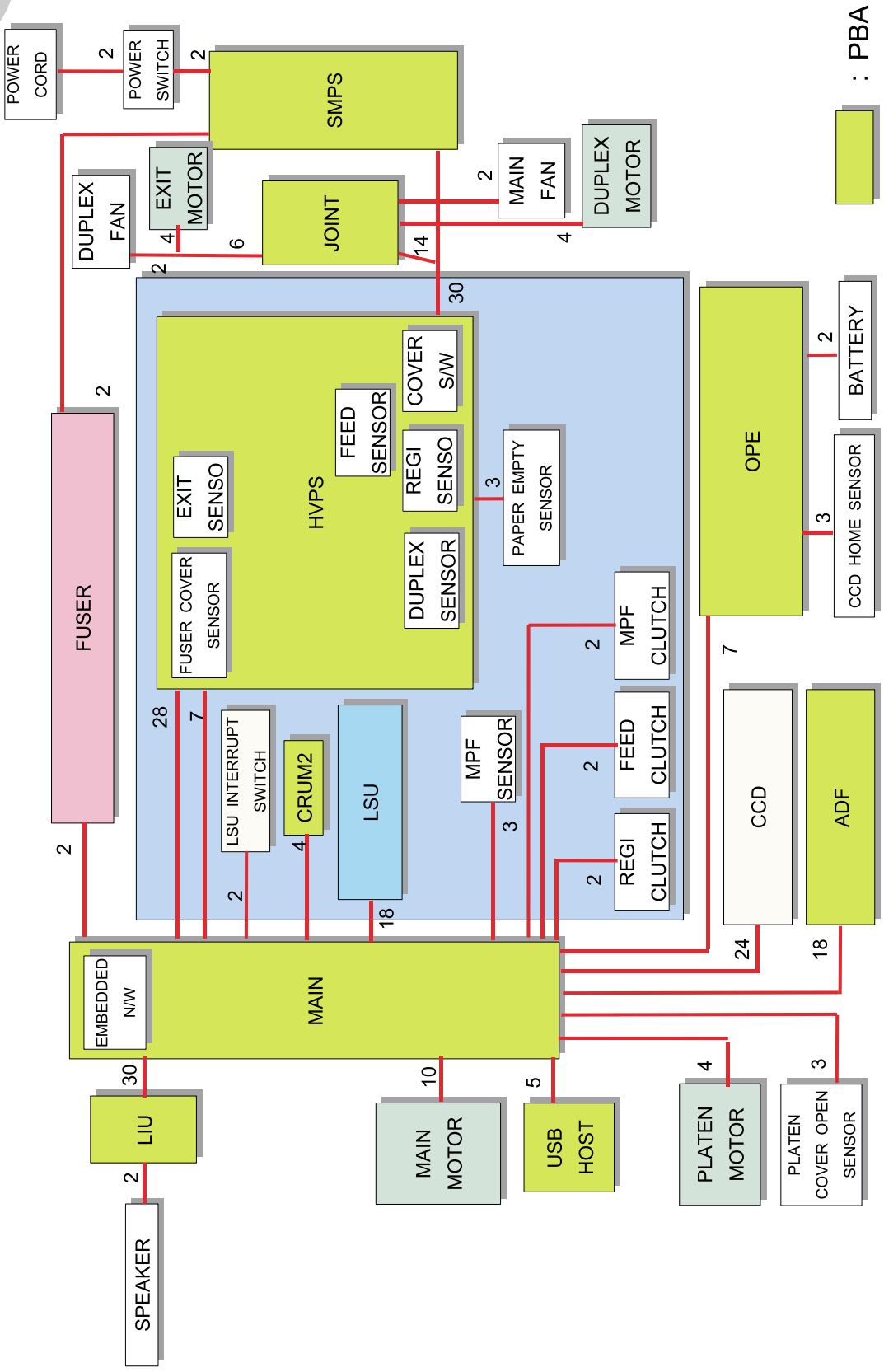

10. Schematic Diagrams

10.1 Schematic Main(1/15)

Page	Function
1	Index
2	CHORUSm(1) , JTAG , HYPER
3	CHORUSm(2) , 1.3V REGULATOR , SRAM
4	SDRAM , DIMM SOCKET
5	NOR FLASH MEMORY , DELAY BUFFER , SYSTEM EEPROM
6	EMBEDDED NIC , WLAN SOCKET
7	USB HOST CONTROLLER
8	USB 2.0 DEVICE CONTROLLER
9	IEEE1284 INTERFACE
10	CLK , RESET , BATTERY CHARGER
11	CCD INTERFACE , CCD LAMP PWM CONTROLLER
12	LSU INTERFACE , MODEM INTERFACE , COVER OPEN SENSOR
13	ENGINE INTERFACE , FUSER CONTROLLER , BLDC MOTER INTERFACE
14	EXIT MOTOR , DUPLEX MOTOR , FLATEN MOTOR , DUPLEX INTERFACE
15	ENGINE INTERFACE , SCF INTERFACE

Engineer
Drawn by
R&D CHK
DOC CTRL CHK
MFG ENGR CHK
QA CHK

COMPANY NAME
Address
City

TITLE: GRENACHE MAIN INDEX

Size A3

Changed by: hkjung2
Date Changed: Thursday, December 15, 2005
Time Changed: 9:05:26 am

REV: V0.3
Drawing Number
Sheet 1 of 15

This Document can not be used without Samsung's authorization.

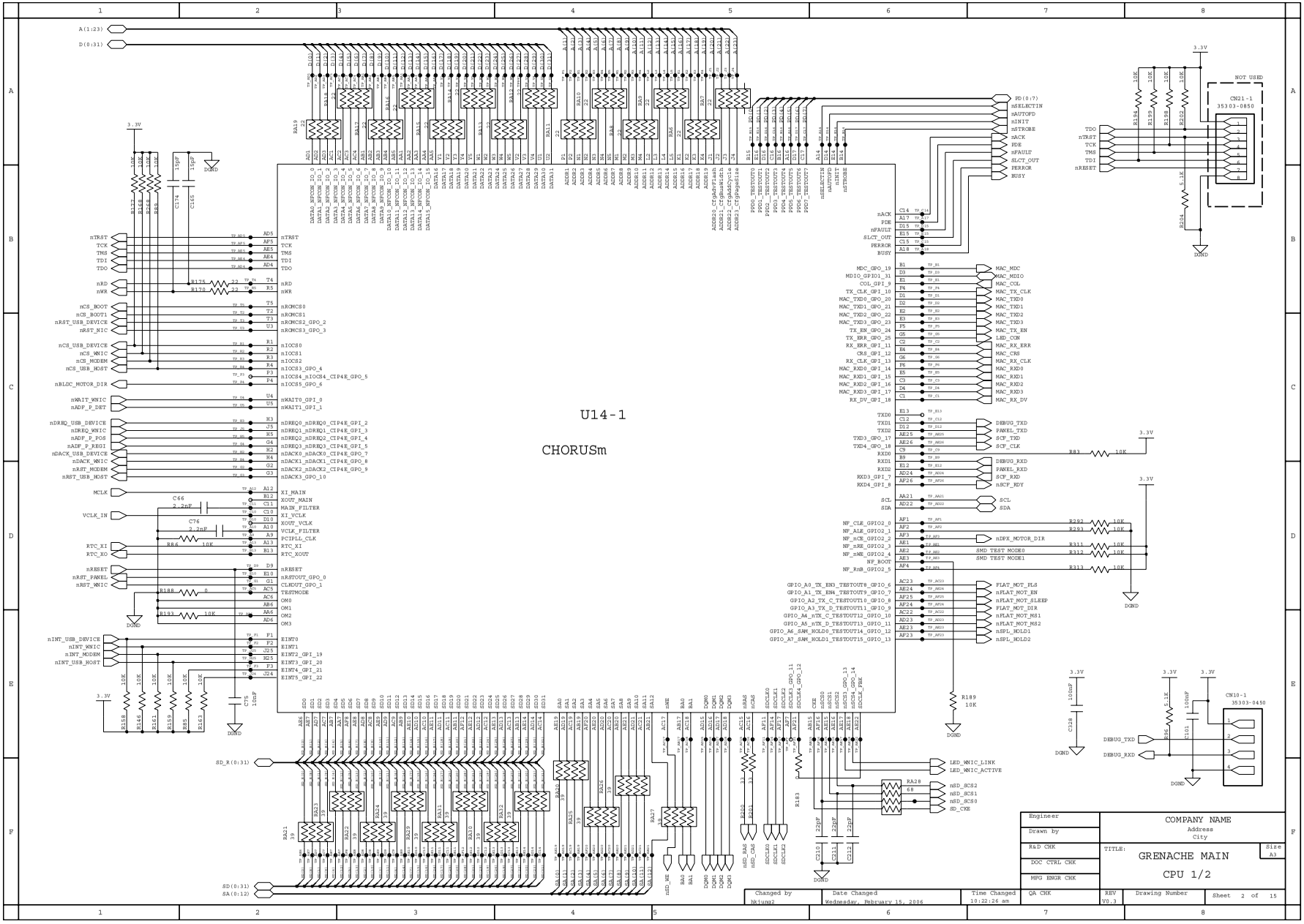

This Document can not be used without Samsung's authorization.

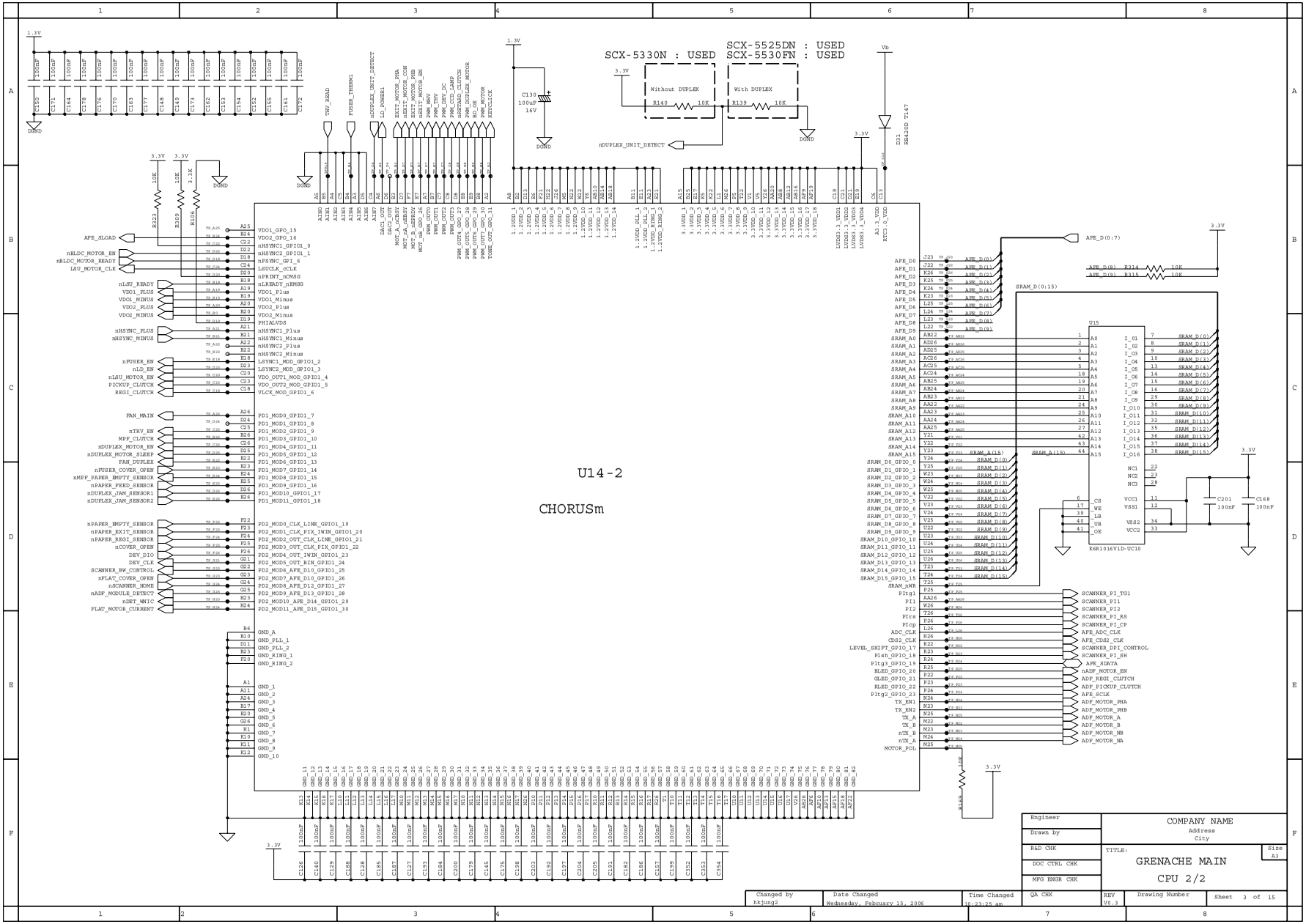

This Document can not be used without Samsung's authorization.

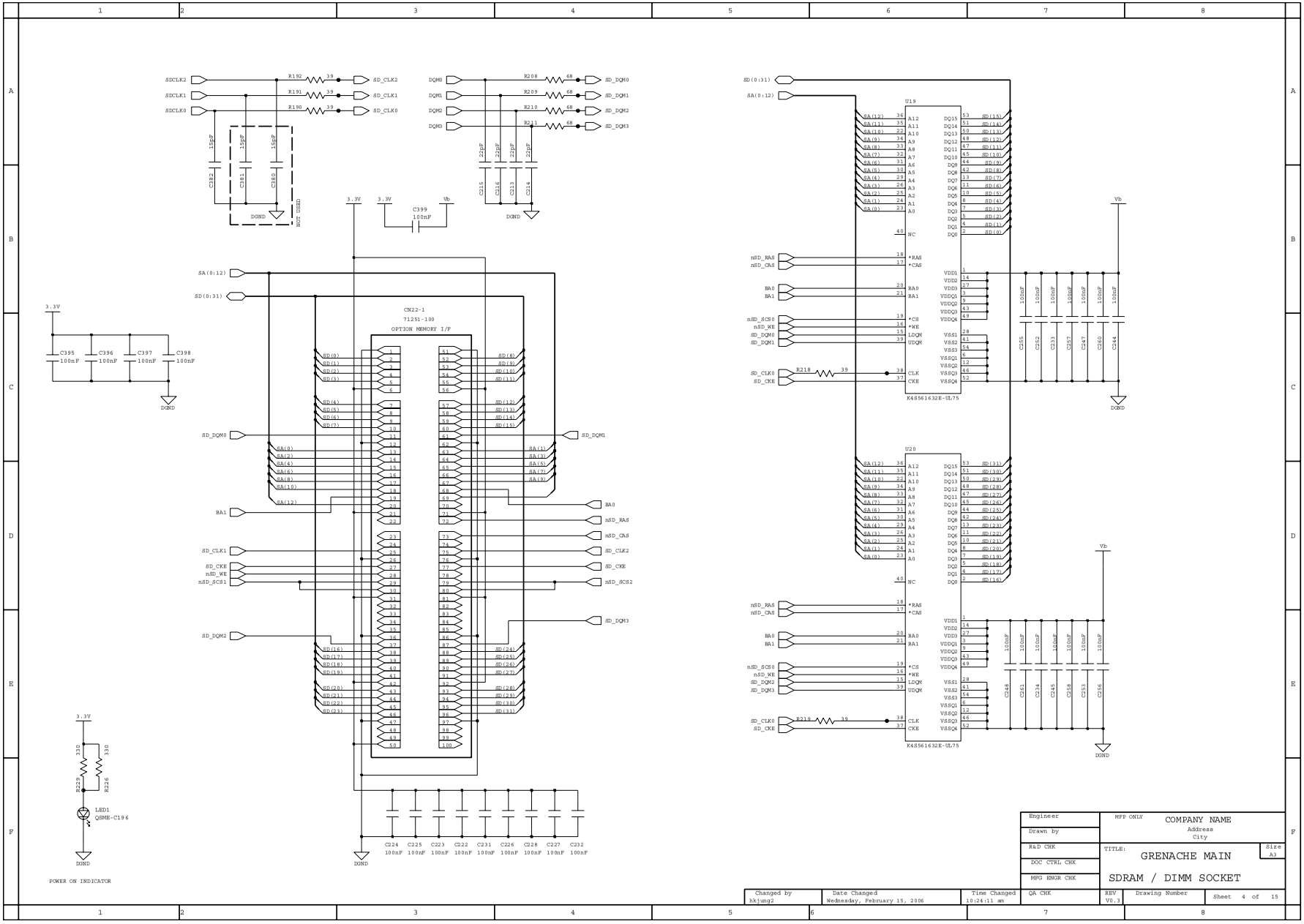

This Document can not be used without Samsung's authorization.

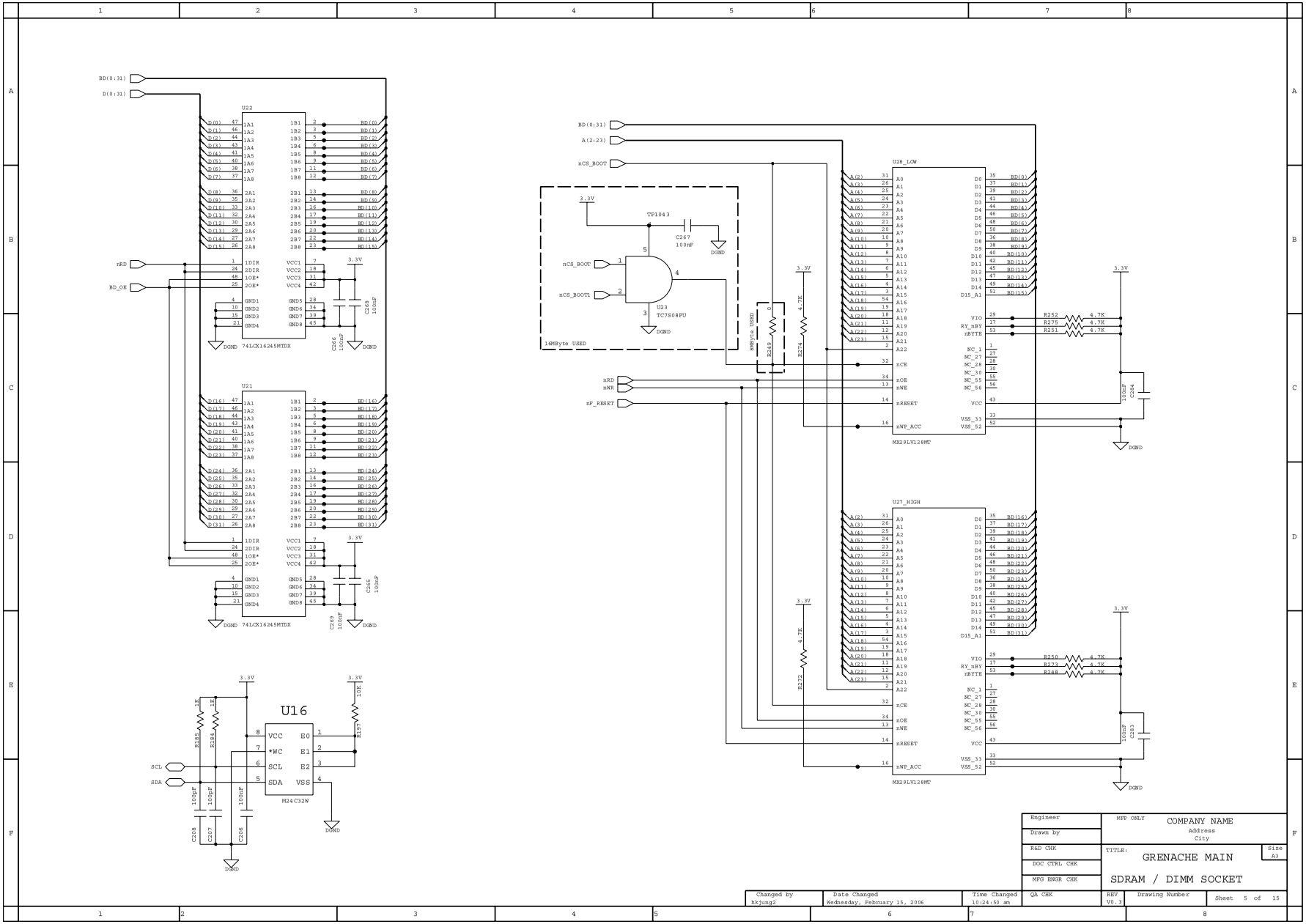

This Document can not be used without Samsung's authorization.

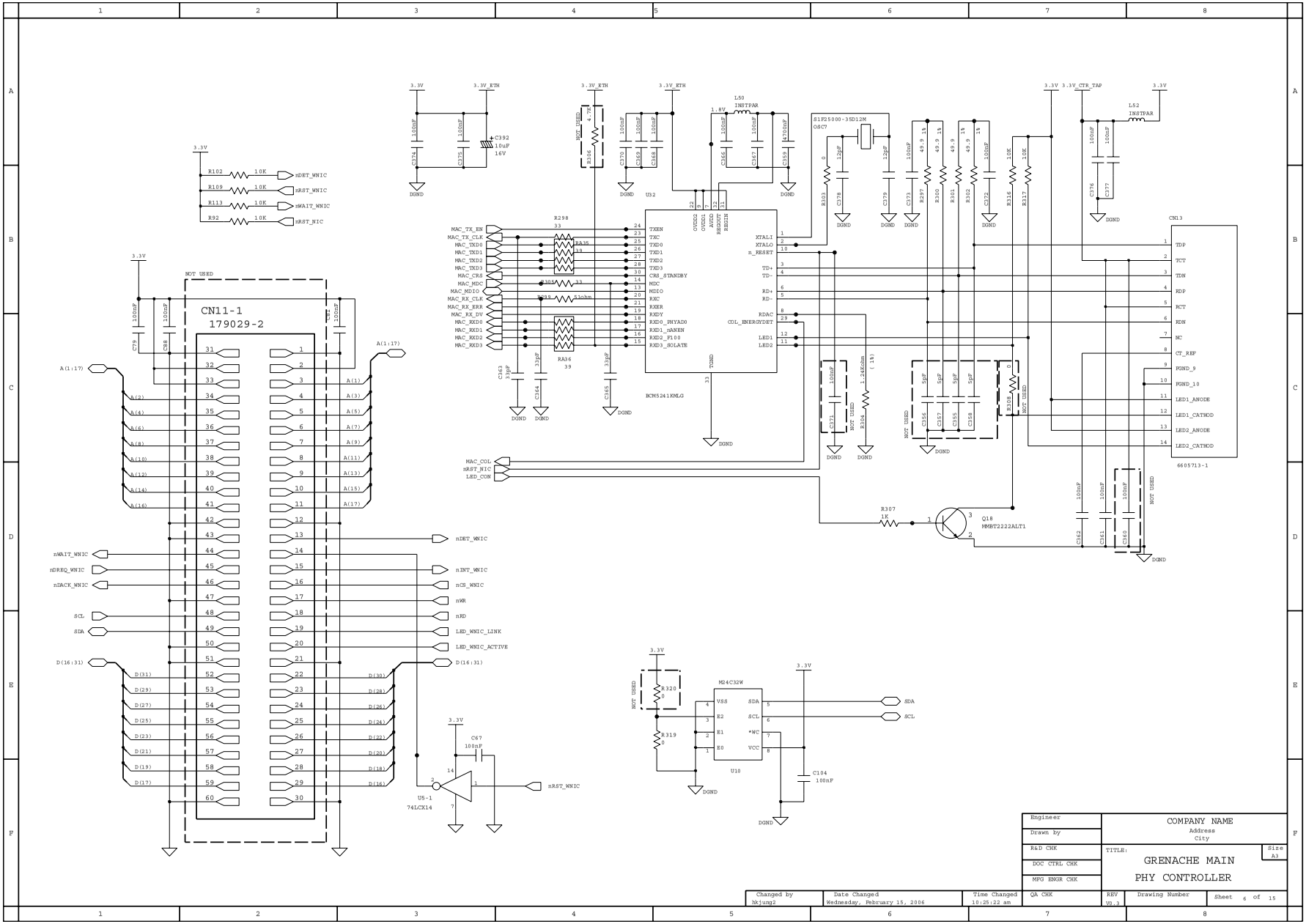

This Document can not be used without Samsung's authorization.

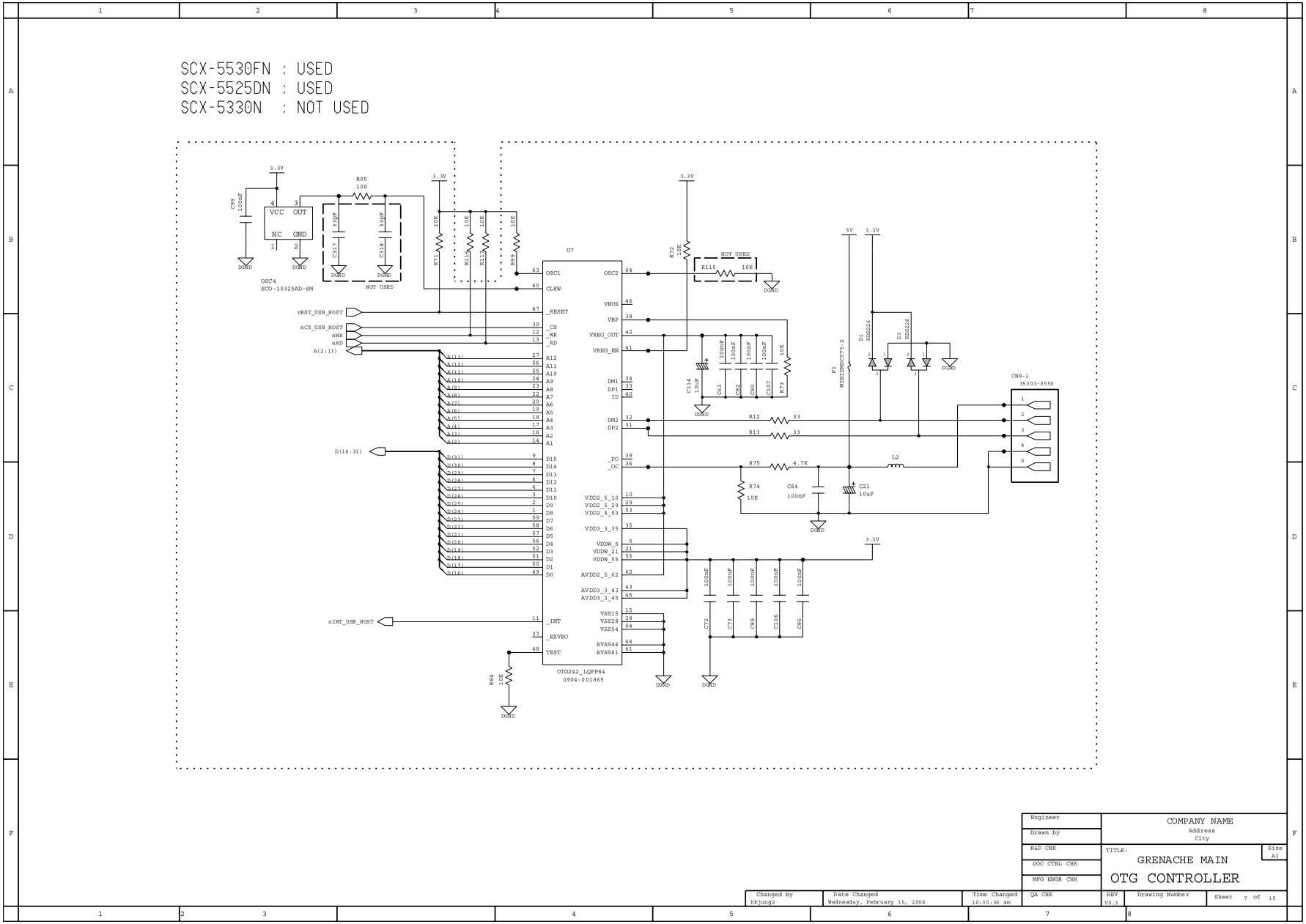

This Document can not be used without Samsung's authorization.

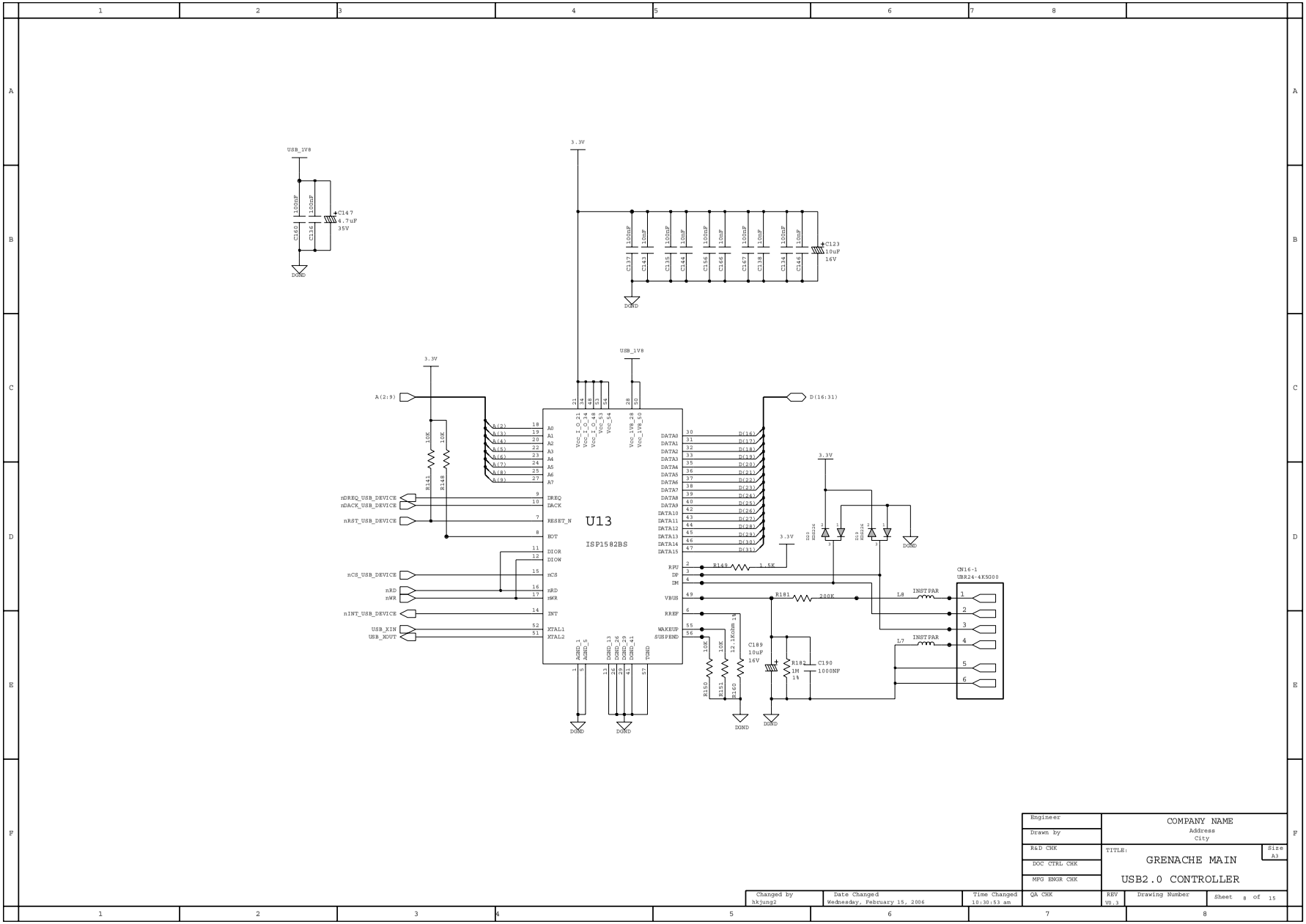

This Document can not be used without Samsung's authorization.

SCX-5530FN : USED
SCX-5330N : USED
SCX-5525DN : NOT USED

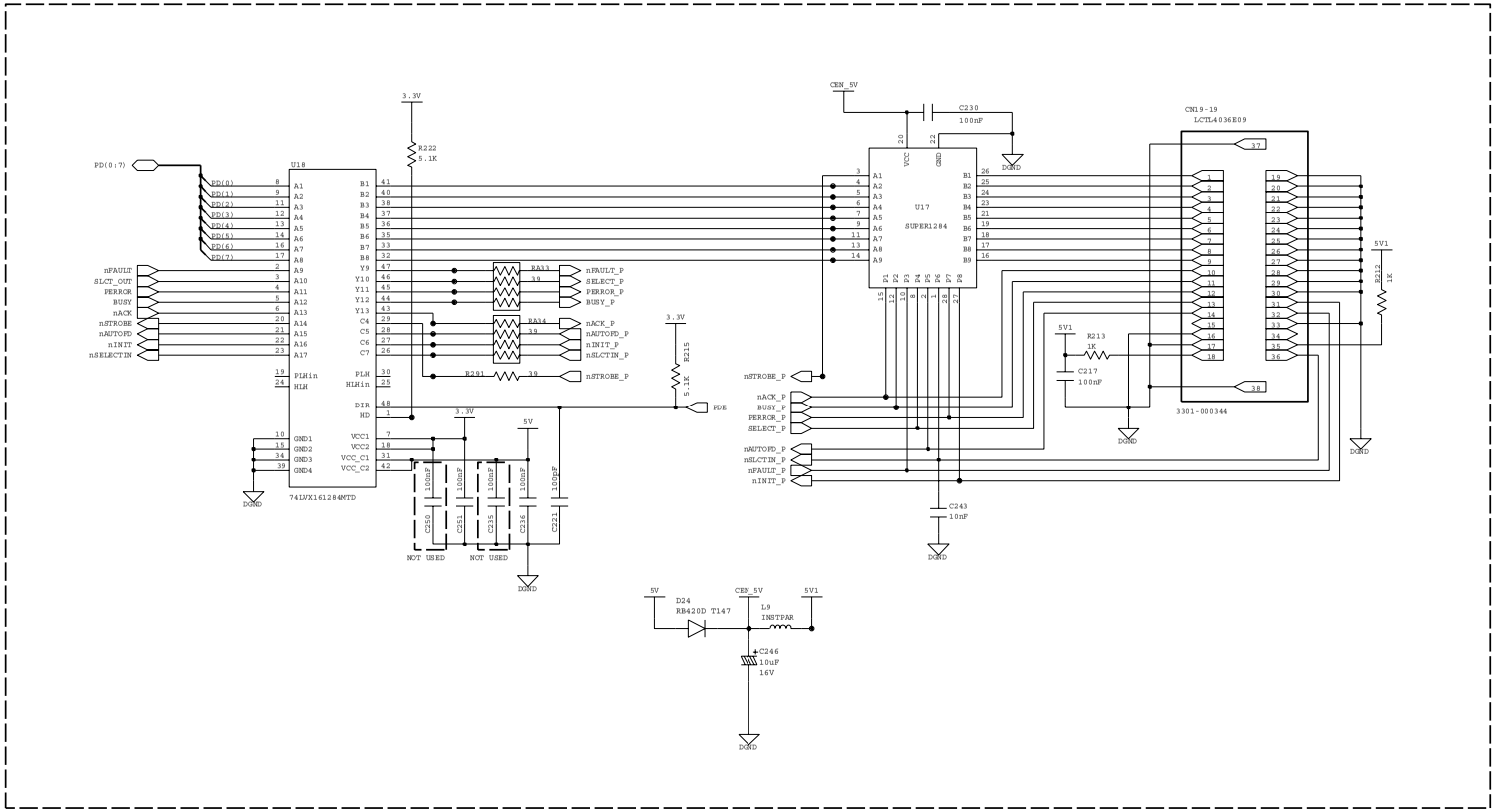

Engineer		COMPANY NAME	
Drawn by		Address	
R&D CHK		City	
DOC CTRL CHK		TITLE: GRENACHE MAIN IEEE1284 DRIVER	Size A3
MFG ENGR CHK			
Changed by: hkjung2	Date Changed: Wednesday, February 15, 2006	Time Changed: 10:31:26 am	QA CHK
REV: V0.3	Drawing Number	Sheet 9 of 15	

This Document can not be used without Samsung's authorization.

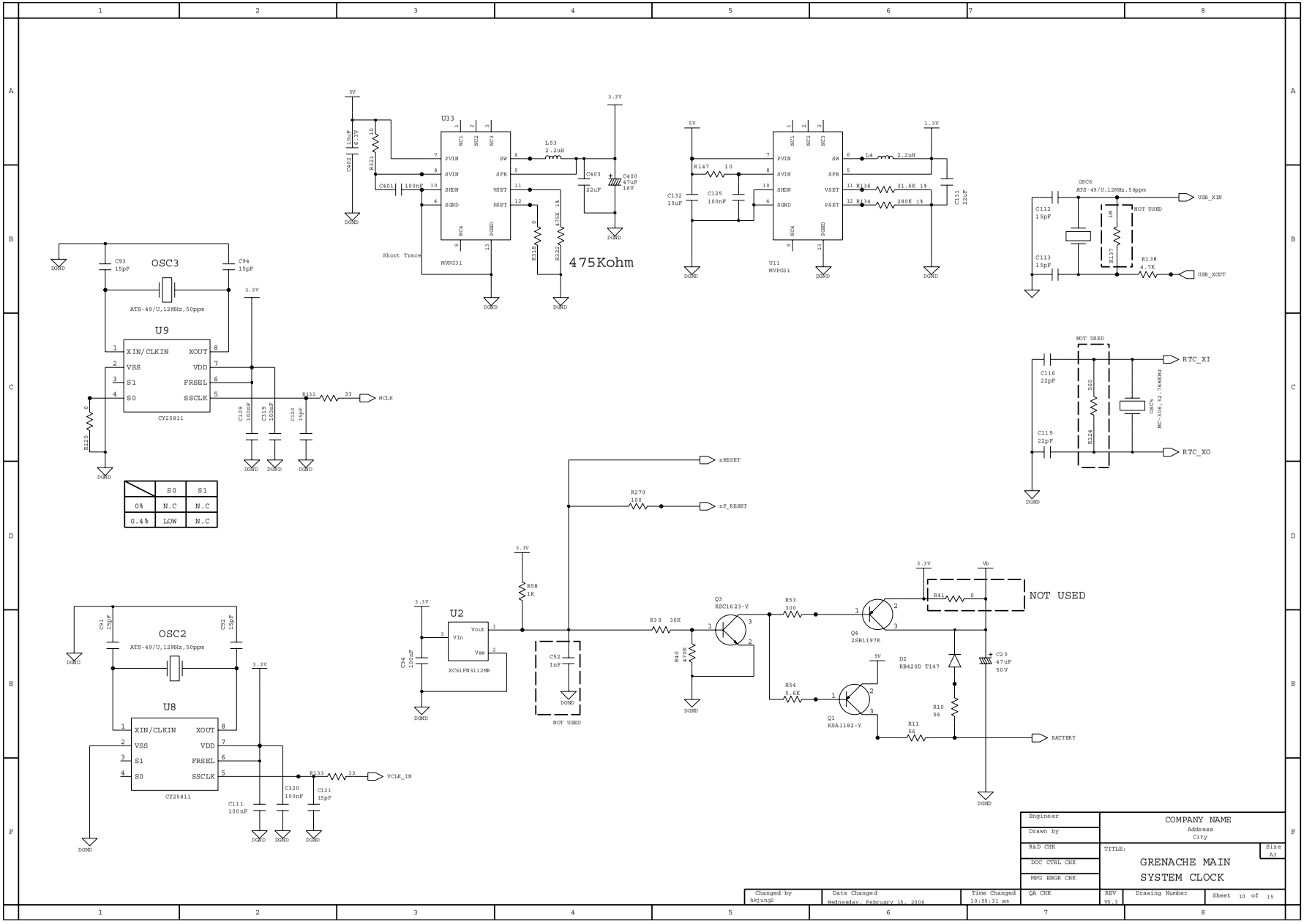

This Document can not be used without Samsung's authorization.

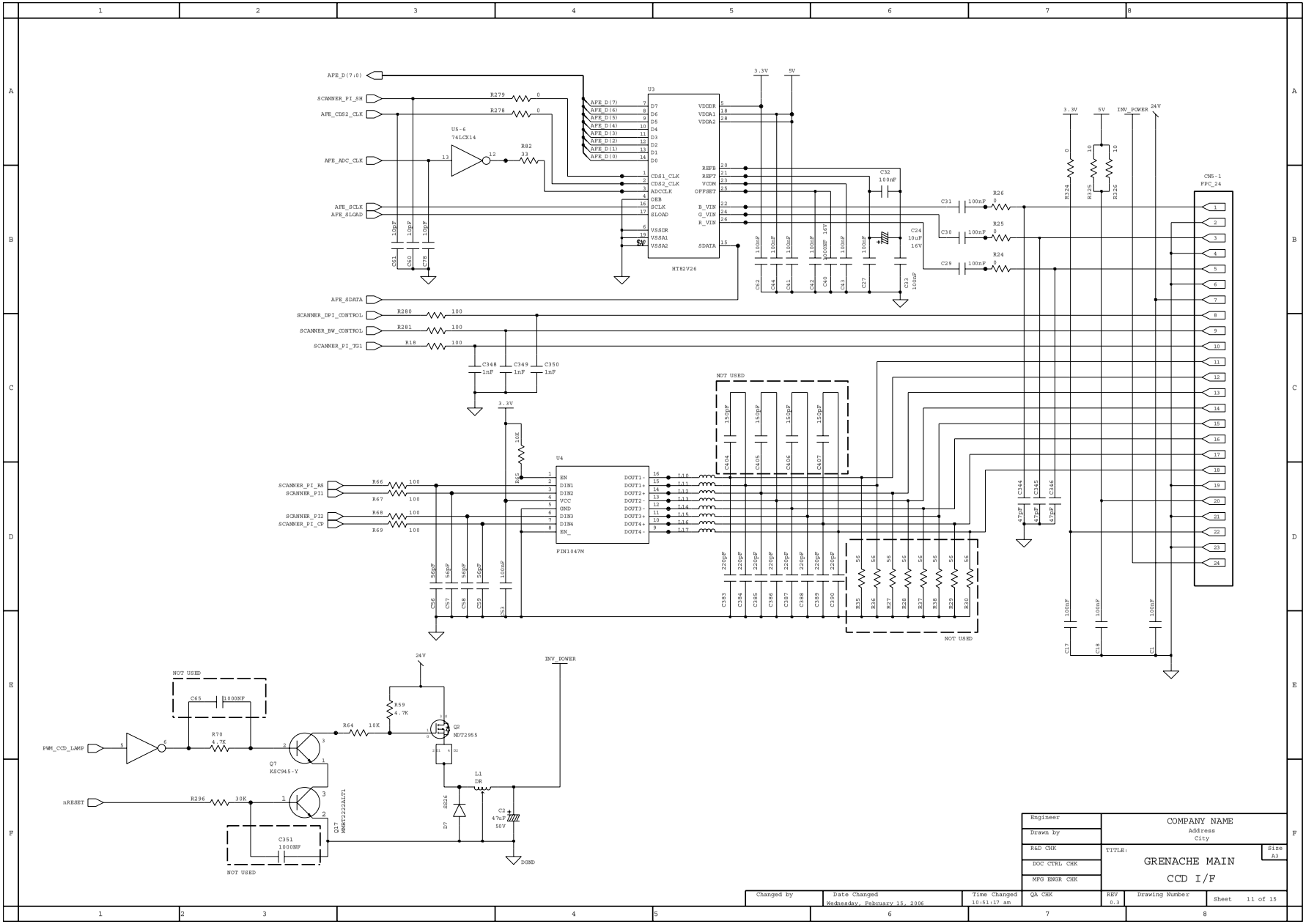

This Document can not be used without Samsung's authorization.

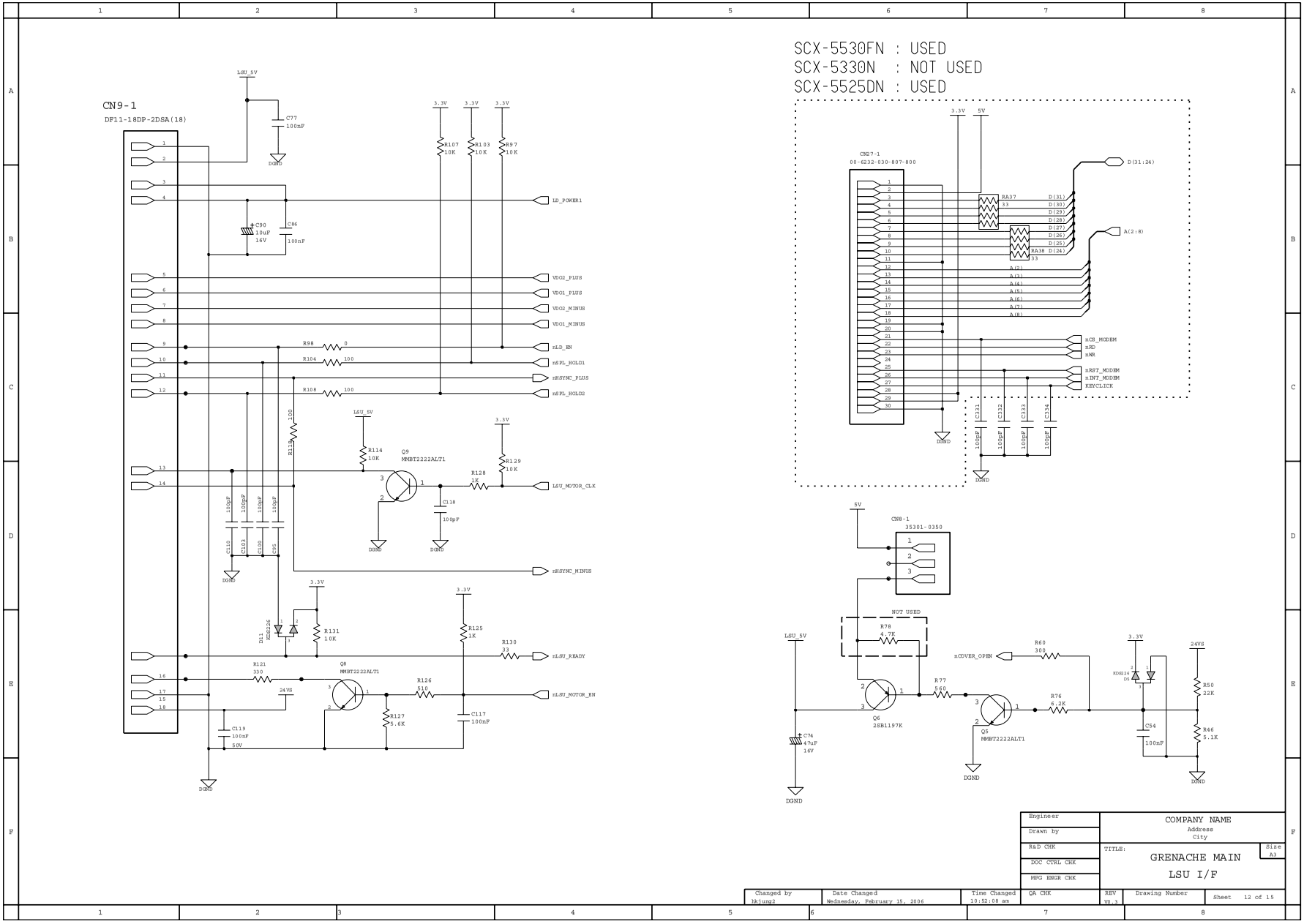

This Document can not be used without Samsung's authorization.

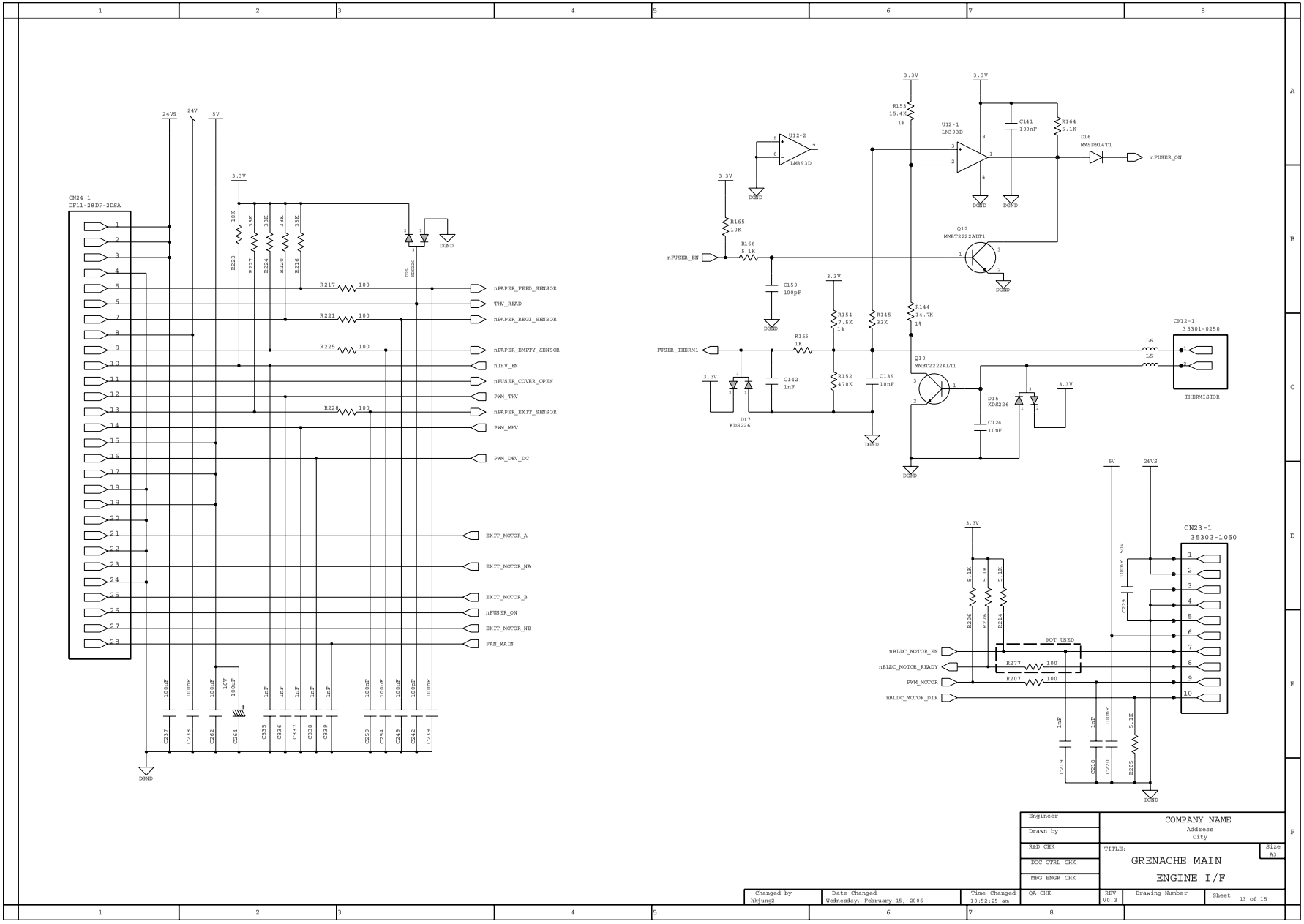

This Document can not be used without Samsung's authorization.

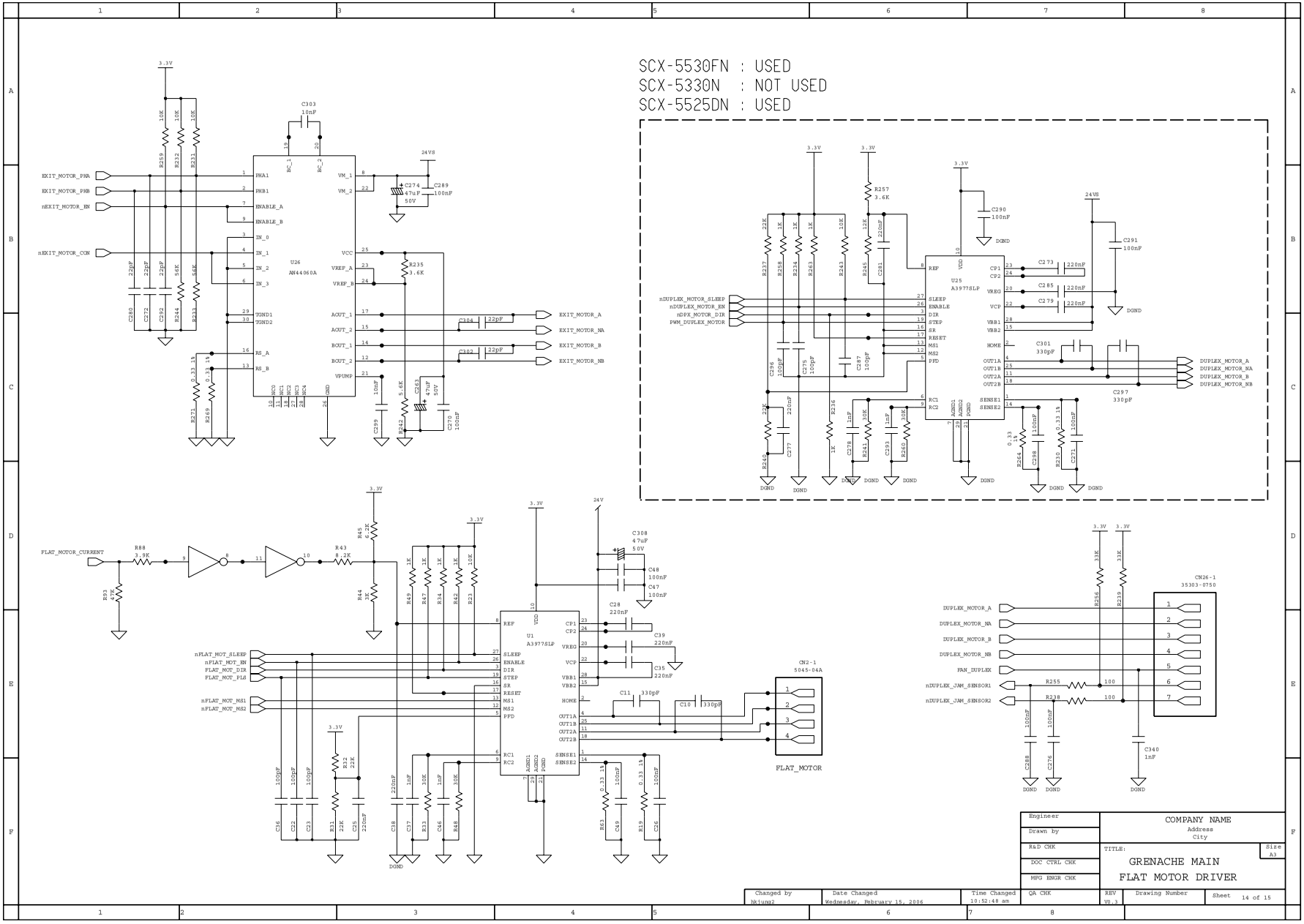

This Document can not be used without Samsung's authorization.

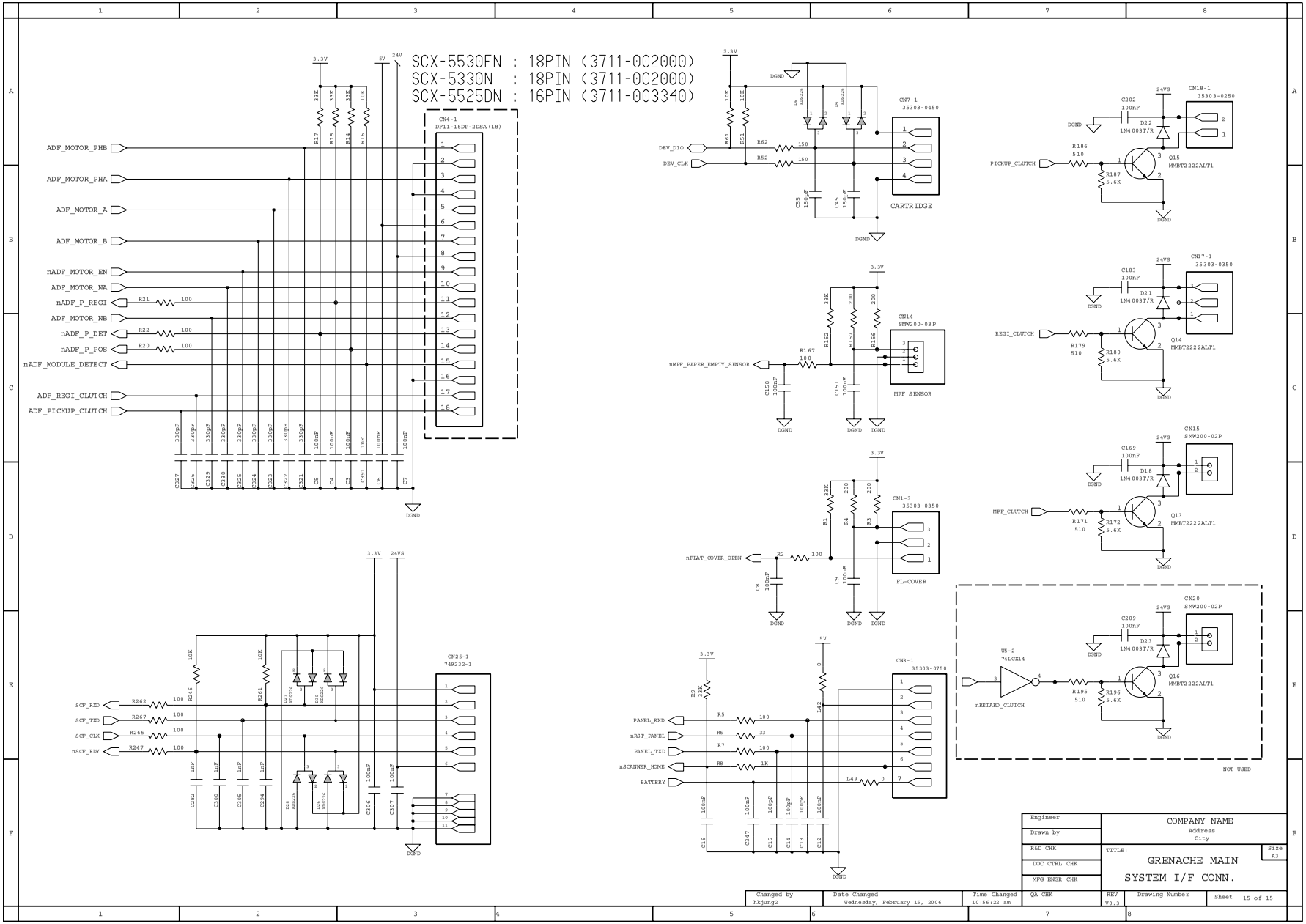

This Document can not be used without Samsung's authorization.

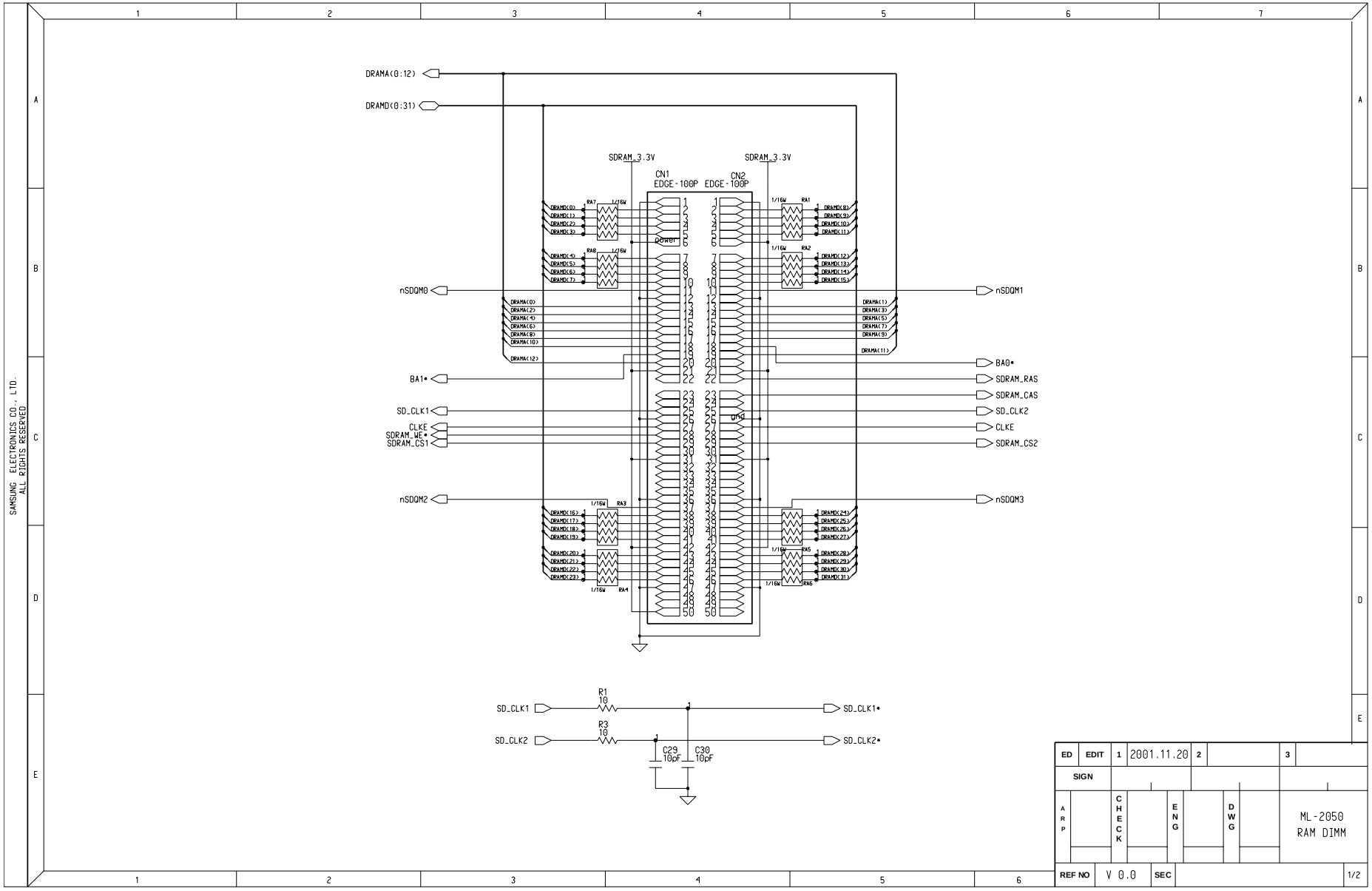

This Document can not be used without Samsung's authorization.

DIMM board(2/2)

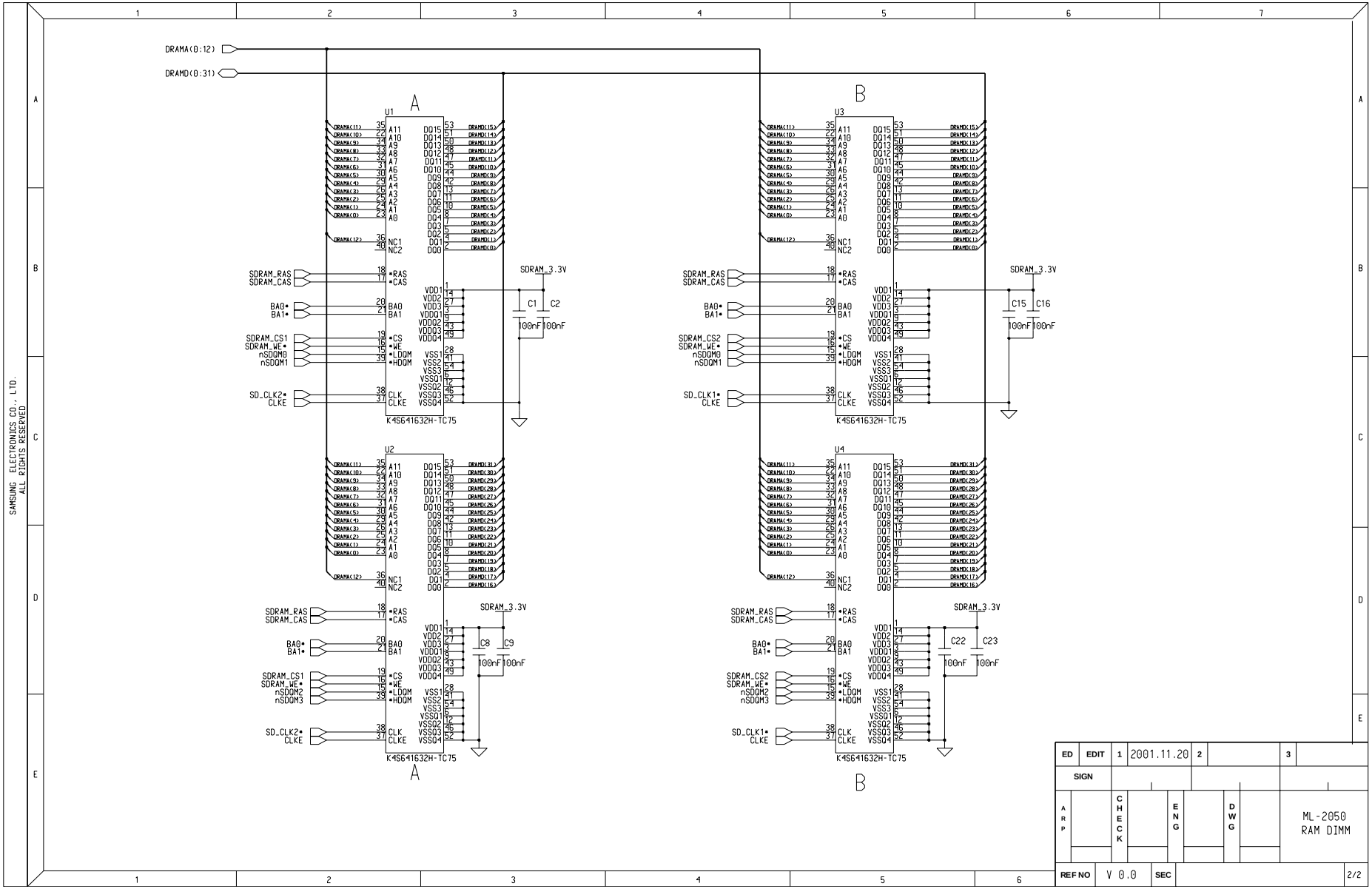

This Document can not be used without Samsung's authorization.

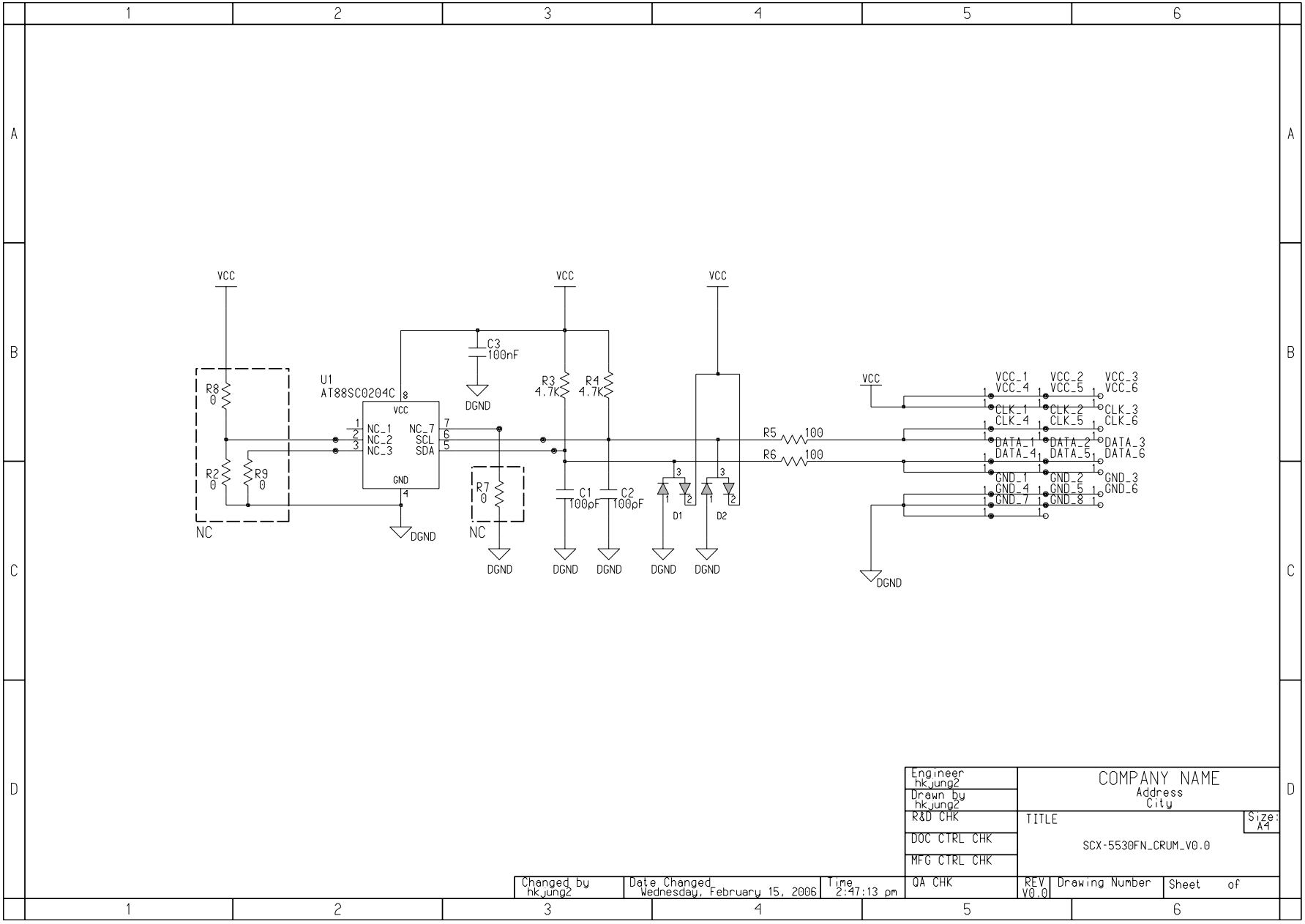

This Document can not be used without Samsung's authorization.

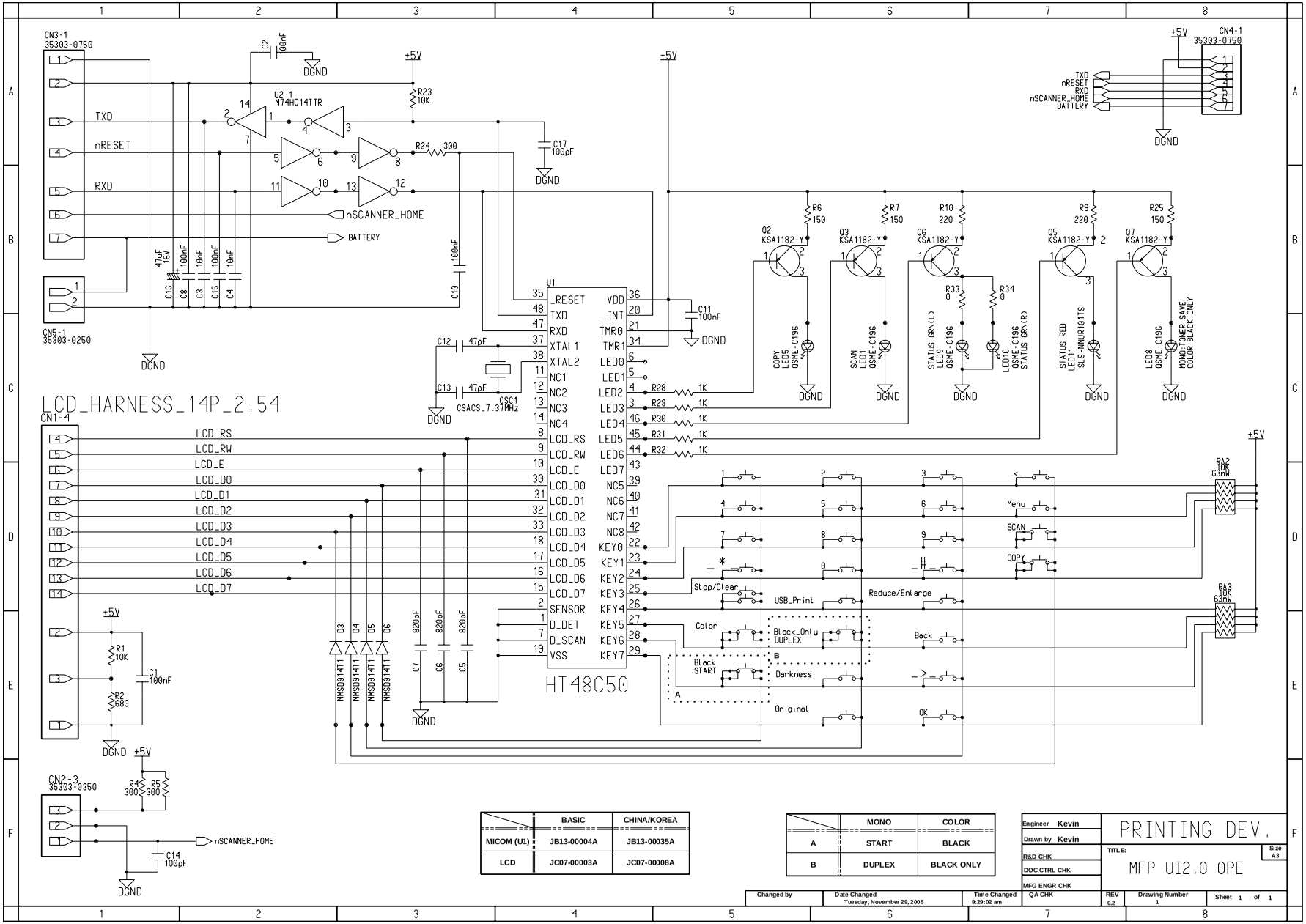

	BASIC	CHINA/KOREA
MICOM (U1)	JB13-00004A	JB13-00035A
LCD	JC07-00003A	JC07-00008A

	MONO	COLOR
A	START	BLACK
B	DUPLEX	BLACK ONLY

Engineer	Kevin
Drawn by	Kevin
R&D CHK	
DOC CTRL CHK	
MFG ENGR CHK	
QA CHK	

Changed by	Date Changed	Time Changed	REV	Drawing Number	Sheet
	Tuesday, November 29, 2005	9:29:02 am	0.2	1	1 of 1

This Document can not be used without Samsung's authorization.

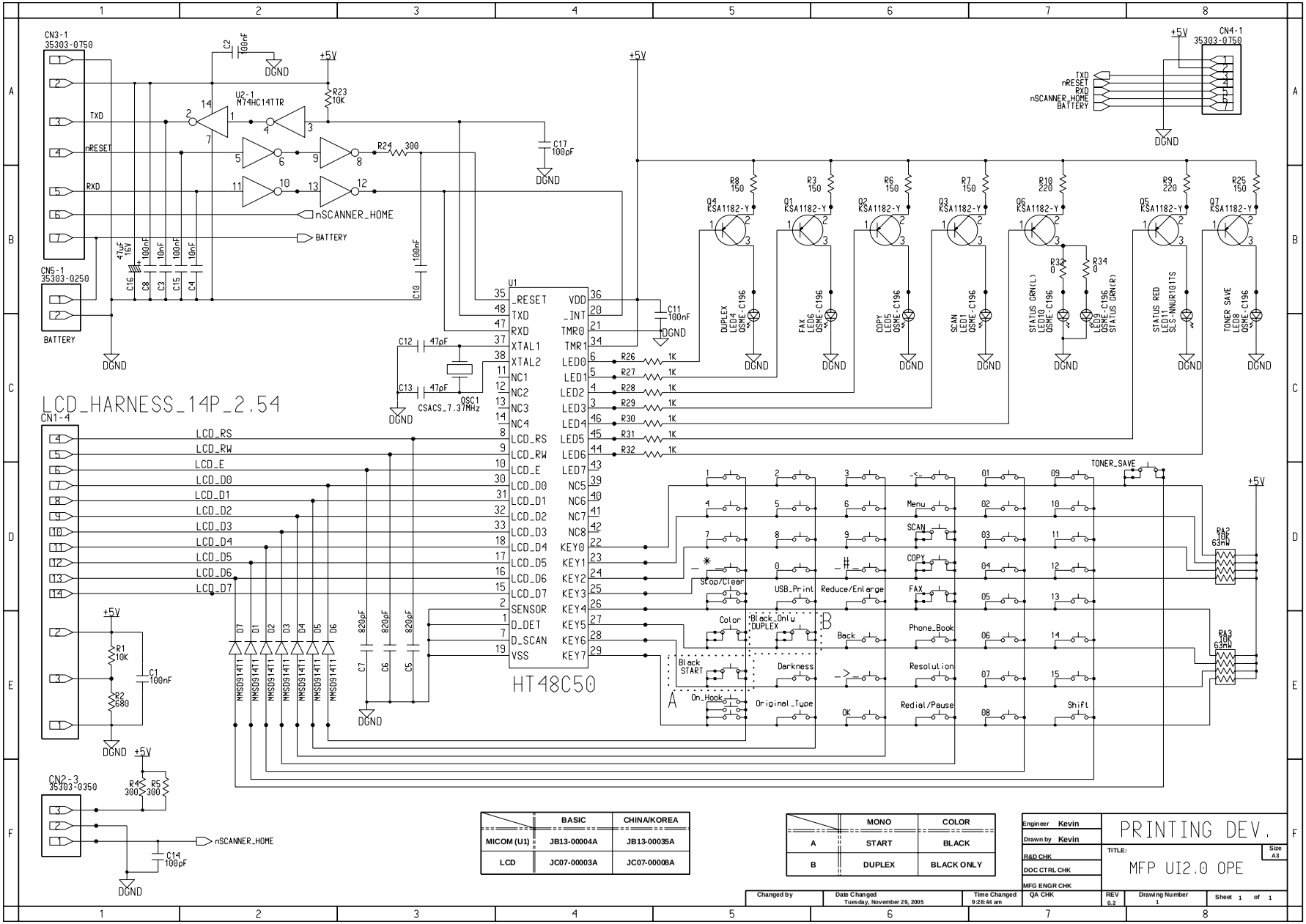

	BASIC	CHINA/KOREA
MICOM (U1)	JB13-00004A	JB13-00035A
LCD	JC07-00003A	JC07-00008A

	MONO	COLOR
A	START	BLACK
B	DUPLEX	BLACK ONLY

Engineer	Kevin
Drawn by	Kevin
R&D CHK	
DOC CTRL CHK	
MFG ENGR CHK	
QA CHK	

PRINTING DEV.

TITLE: MFP UI2.0 OPE

Size A3

Changed by	Date Changed	Time Changed	REV	Drawing Number	Sheet
	Tuesday, November 29, 2005	9:28:44 am	0.2	1	1 of 1

This Document can not be used without Samsung's authorization.

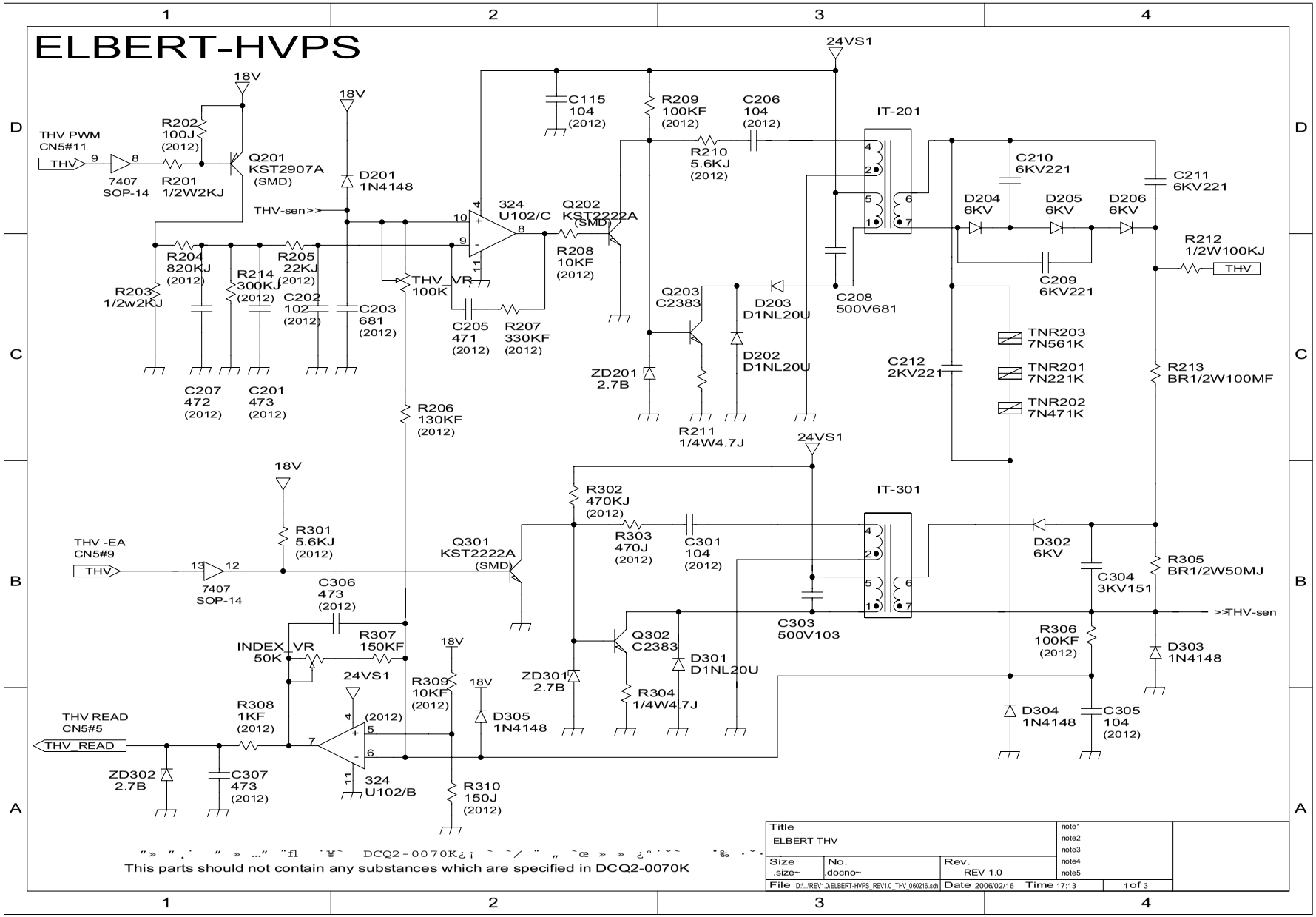

This Document can not be used without Samsung's authorization.

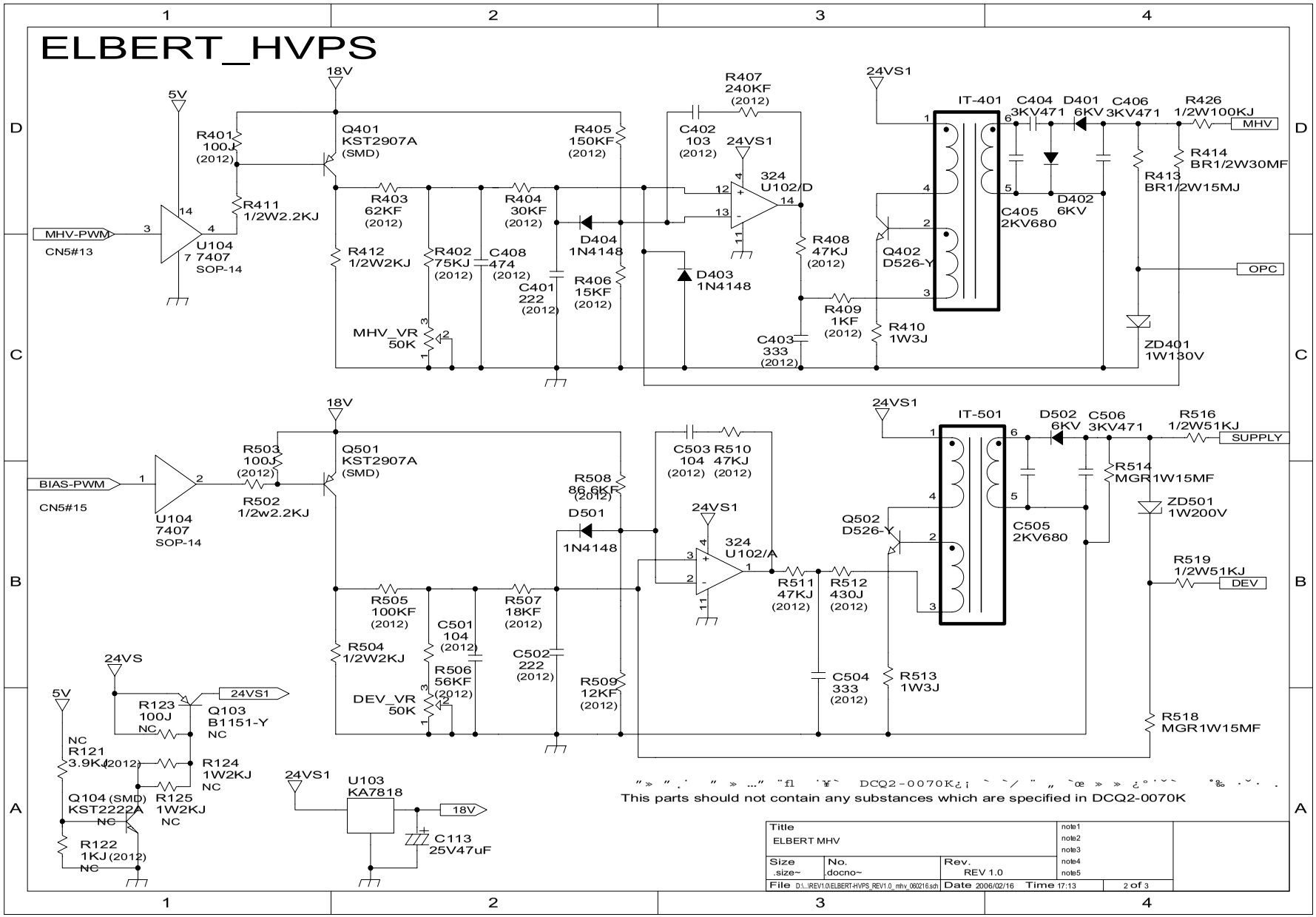

This Document can not be used without Samsung's authorization.

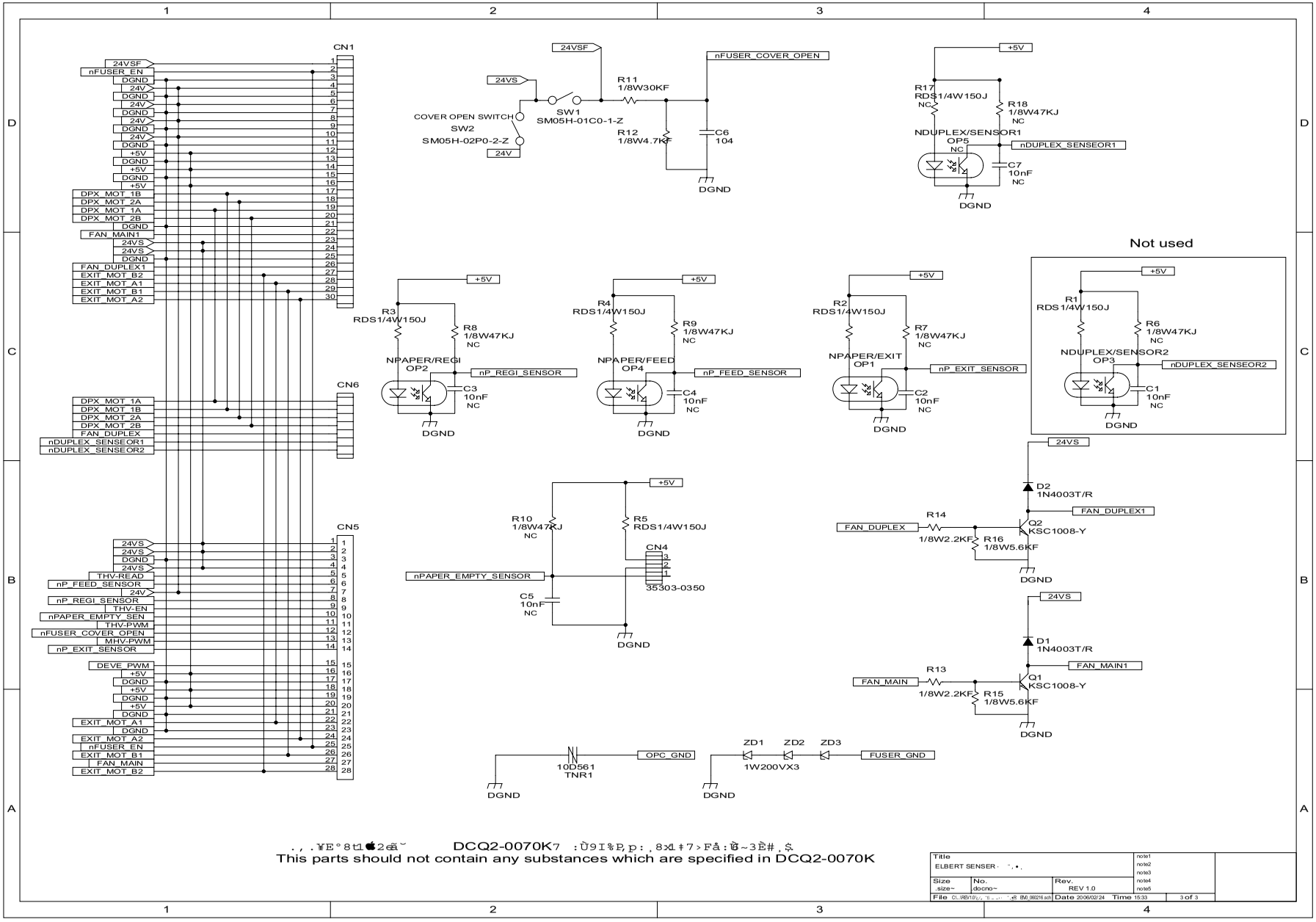

This Document can not be used without Samsung's authorization.

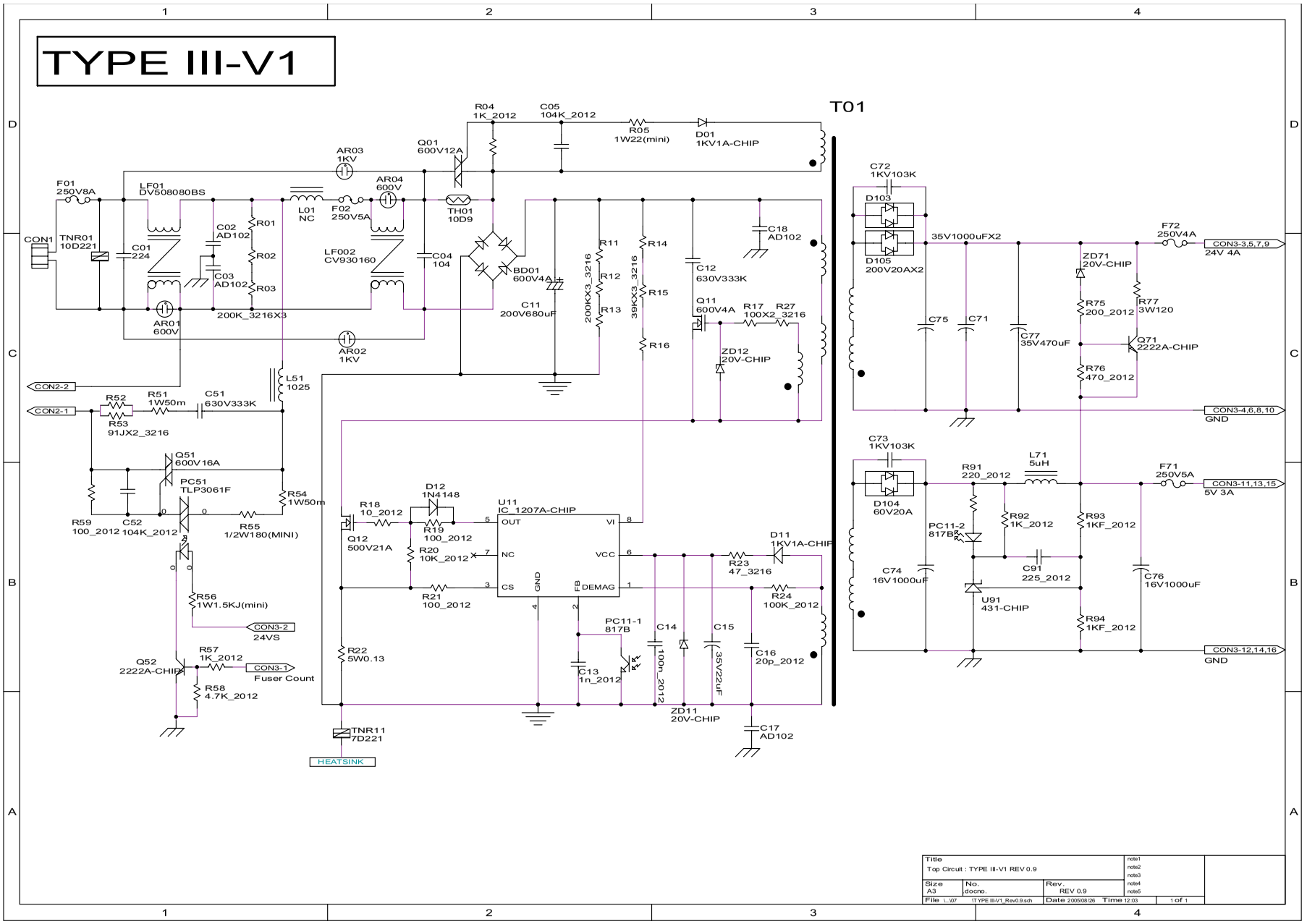

This Document can not be used without Samsung's authorization.

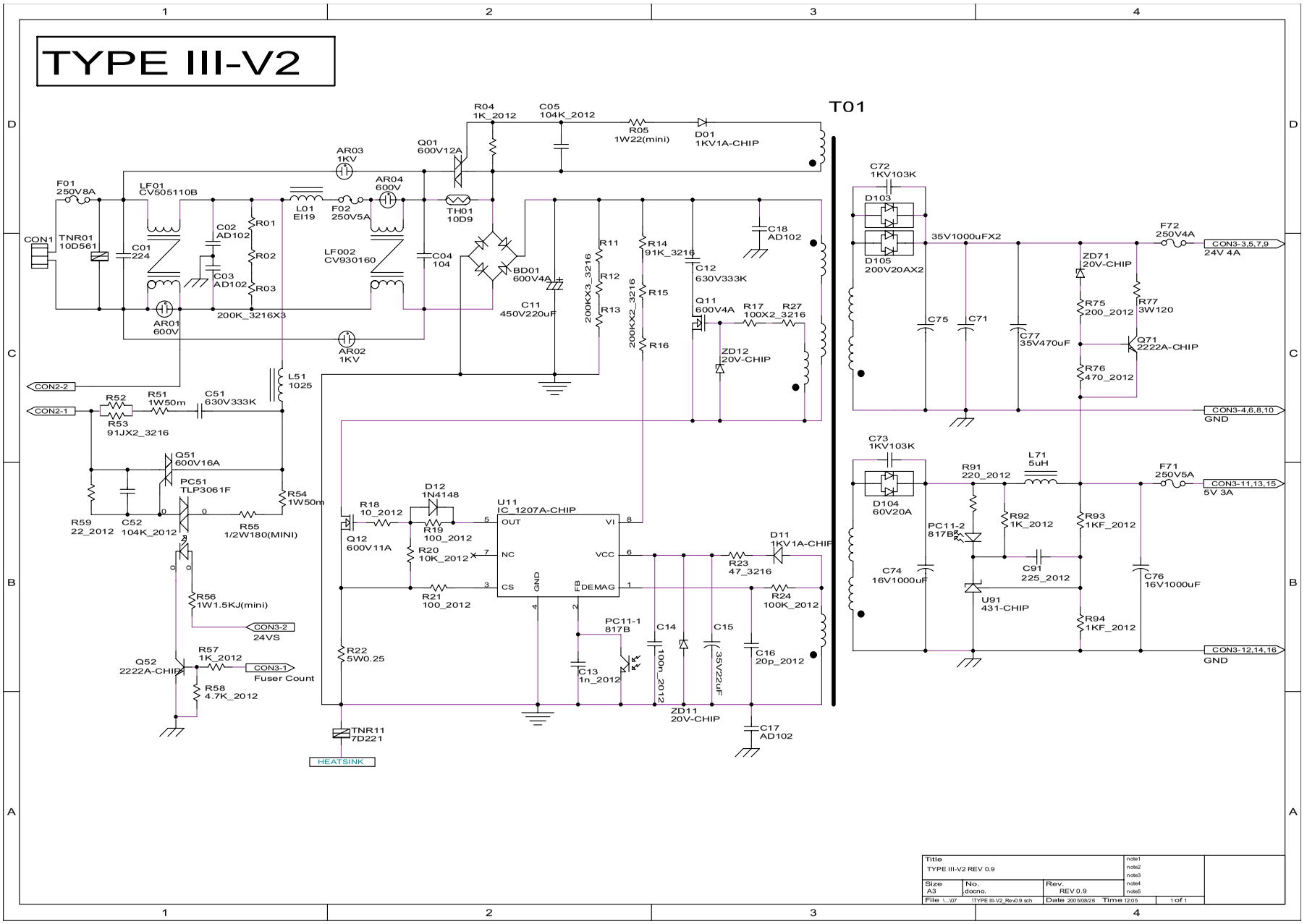

This Document can not be used without Samsung's authorization.

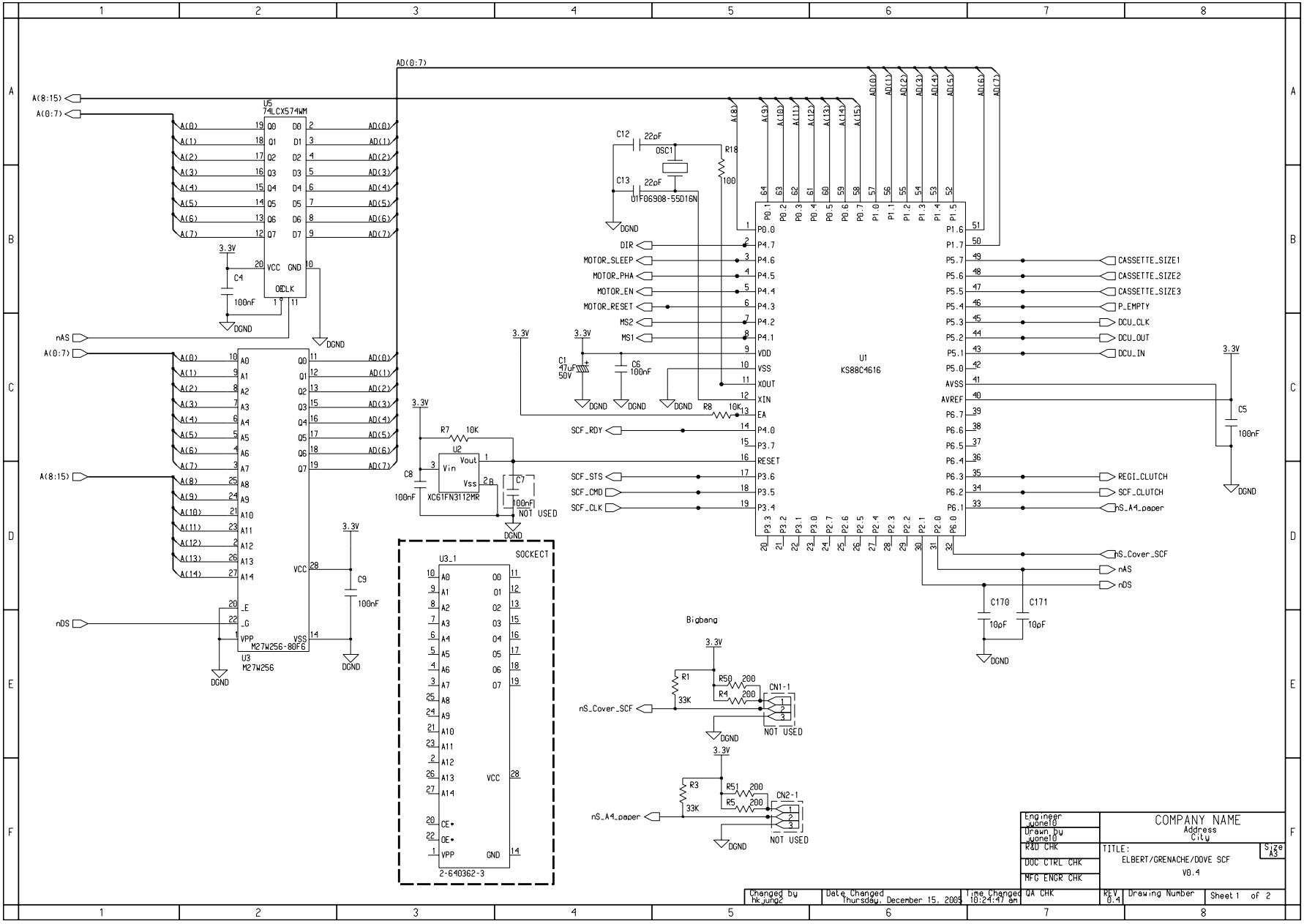

This Document can not be used without Samsung's authorization.

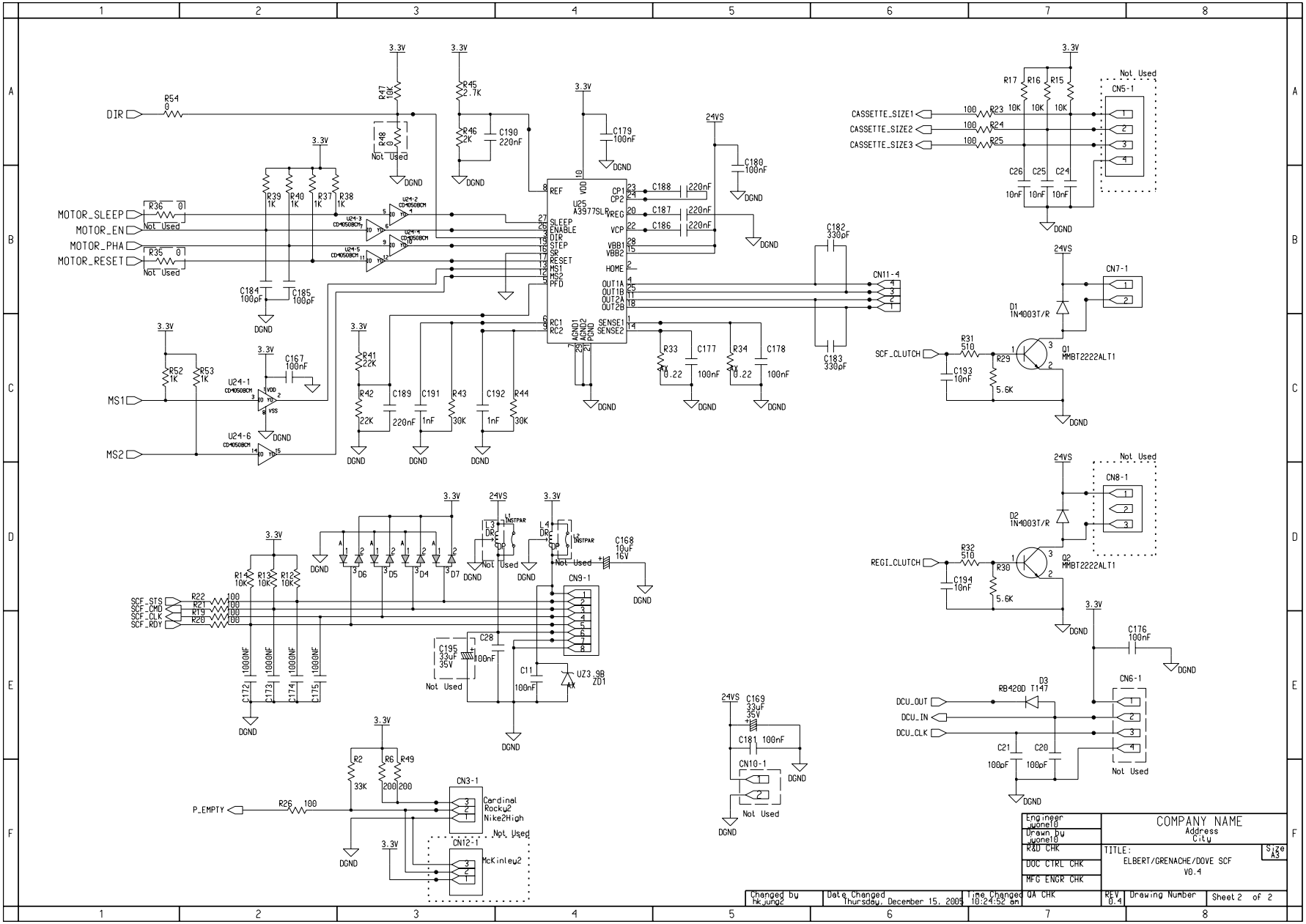

This Document can not be used without Samsung's authorization.

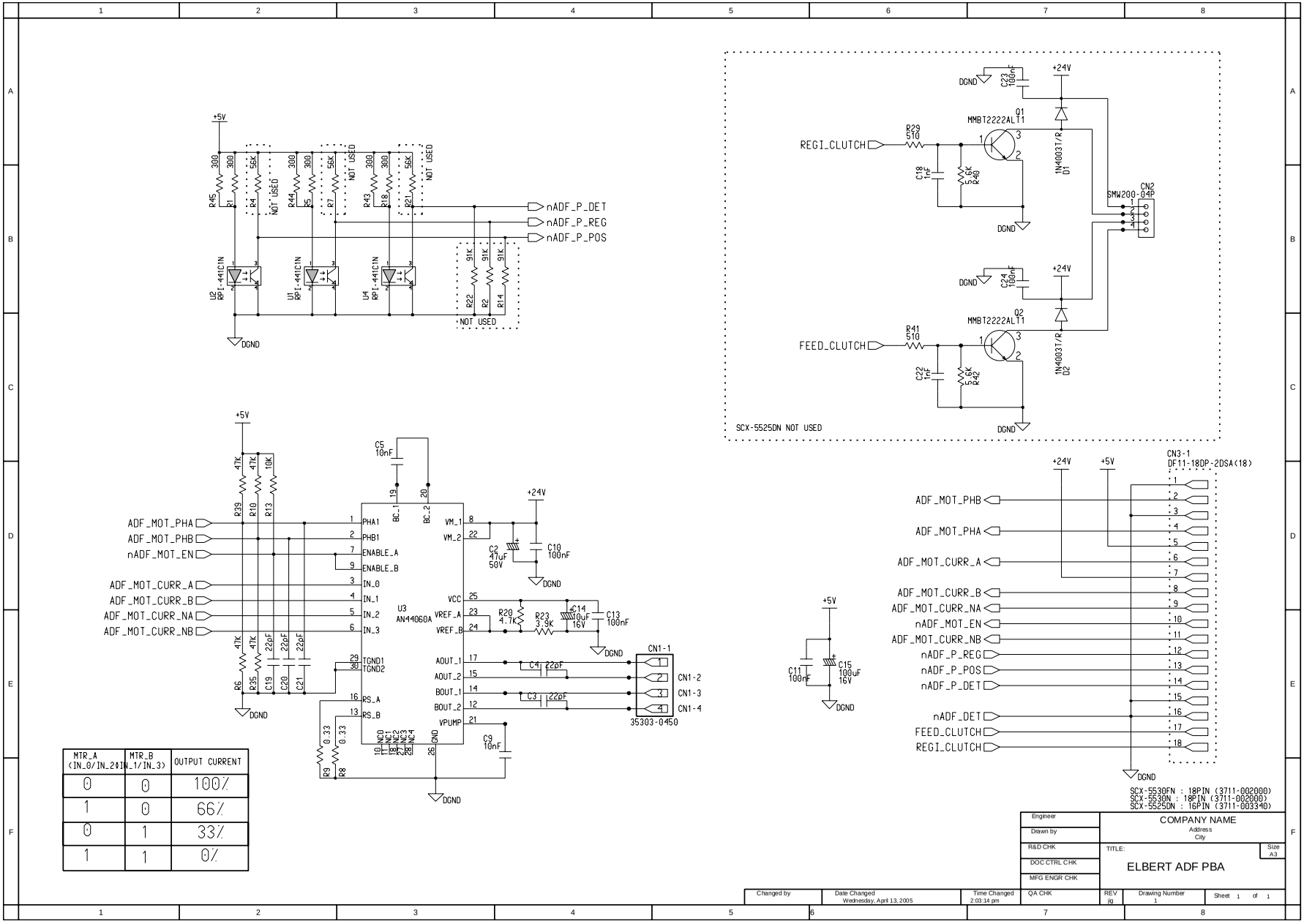

MTR_A (IN_0/IN_2)	MTR_B (IN_1/IN_3)	OUTPUT CURRENT
0	0	100%
1	0	66%
0	1	33%
1	1	0%

This Document can not be used without Samsung's authorization.

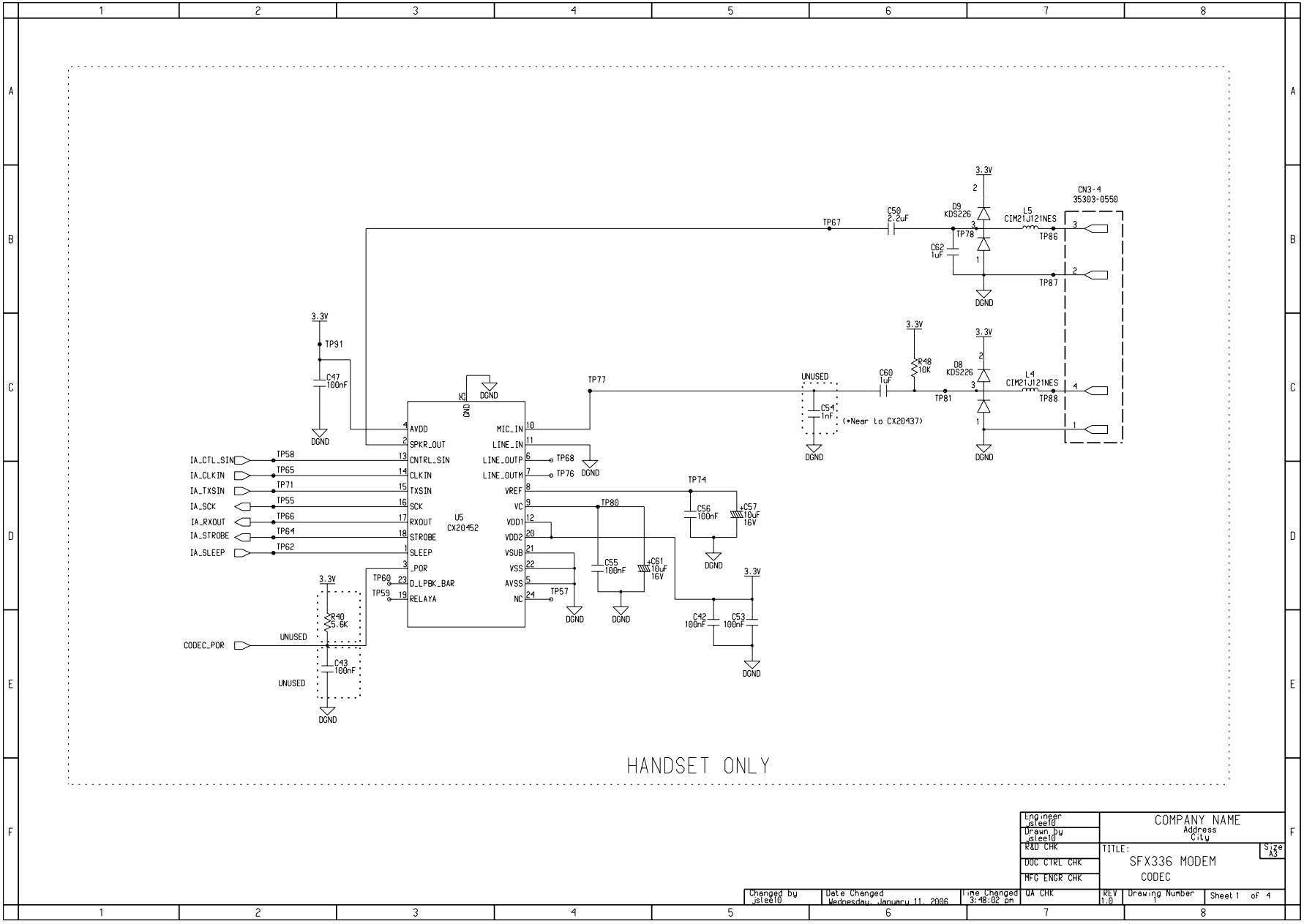

This Document can not be used without Samsung's authorization.

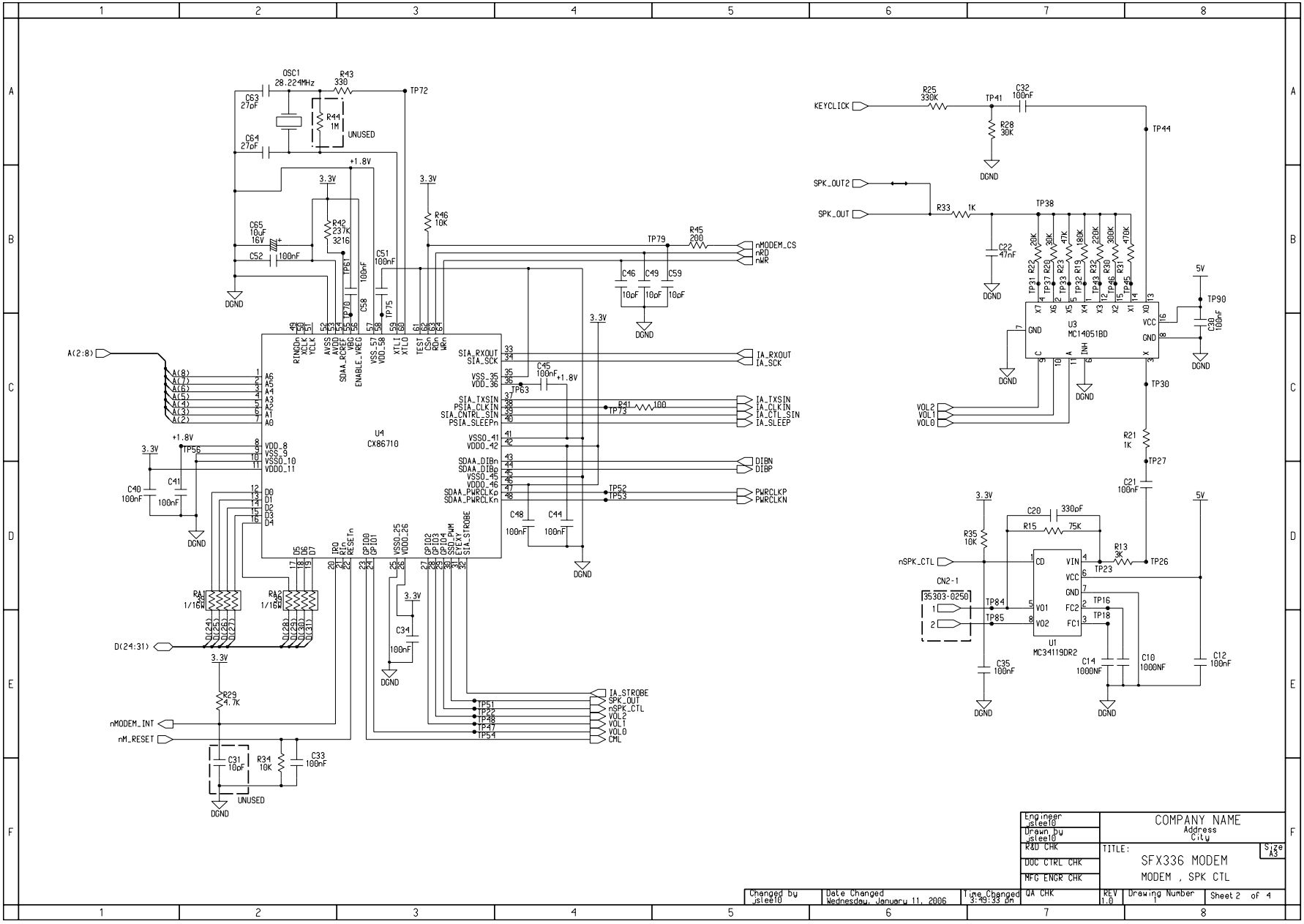

This Document can not be used without Samsung's authorization.

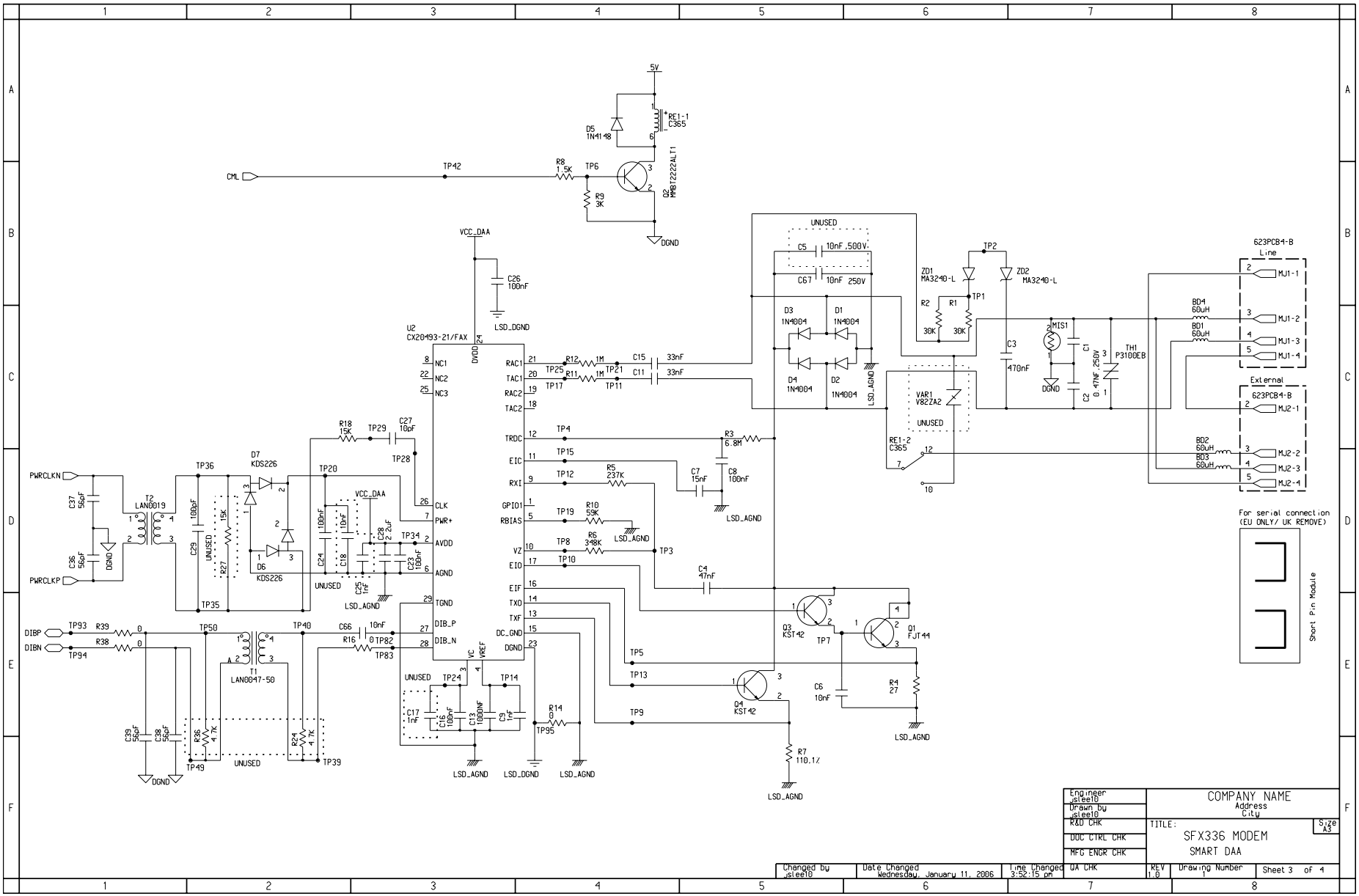

This Document can not be used without Samsung's authorization.

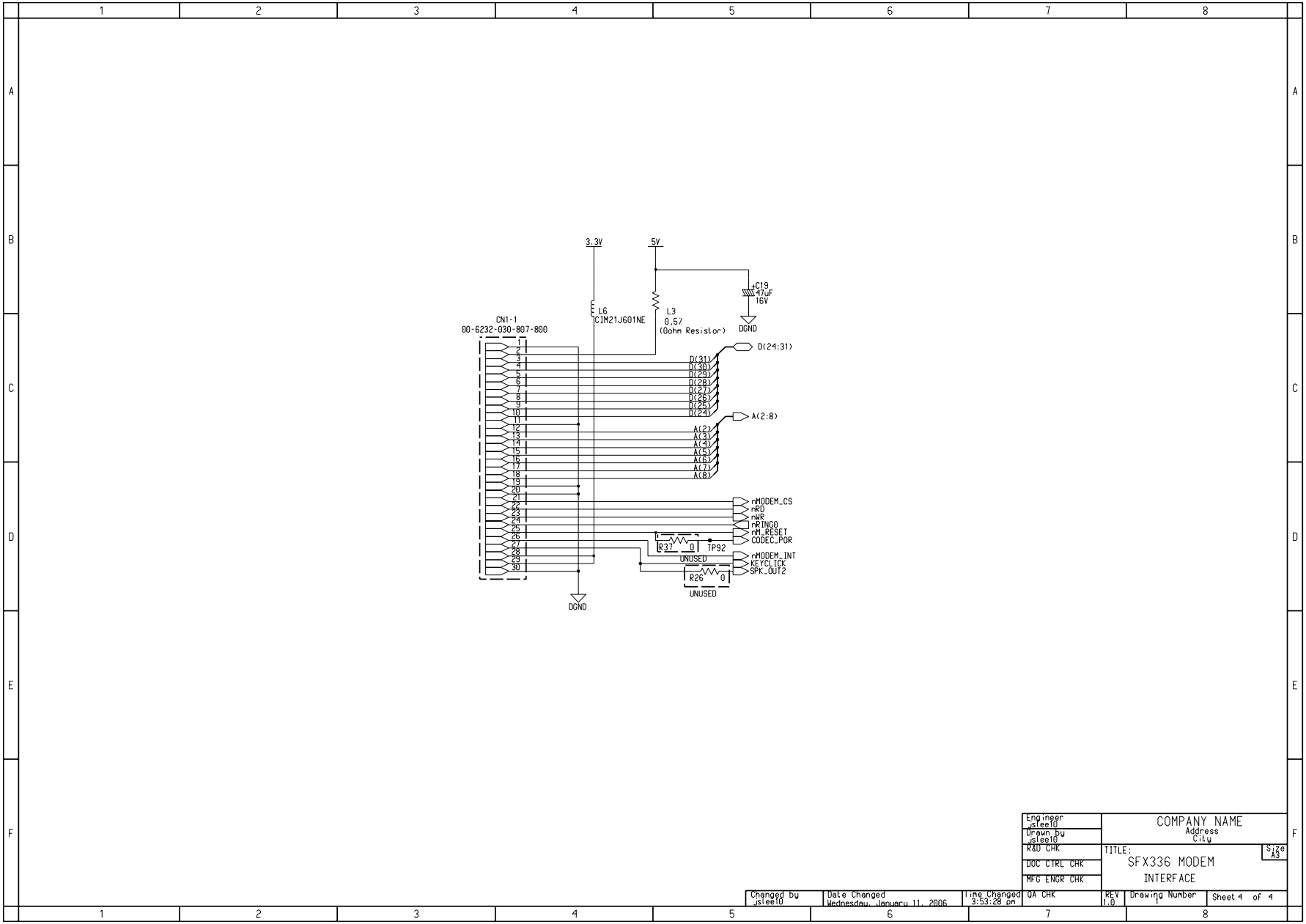

This Document can not be used without Samsung's authorization.

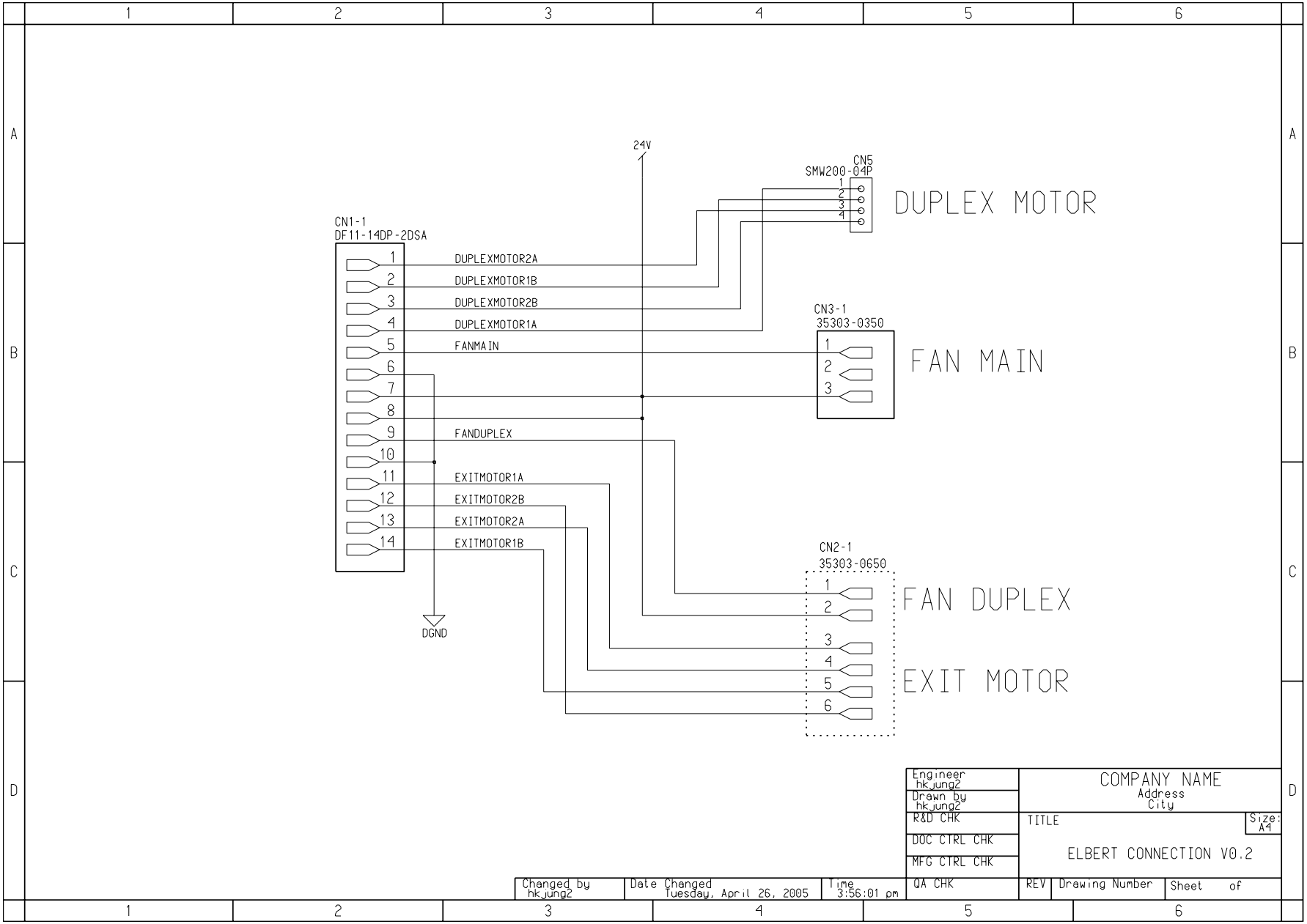

This Document can not be used without Samsung's authorization.

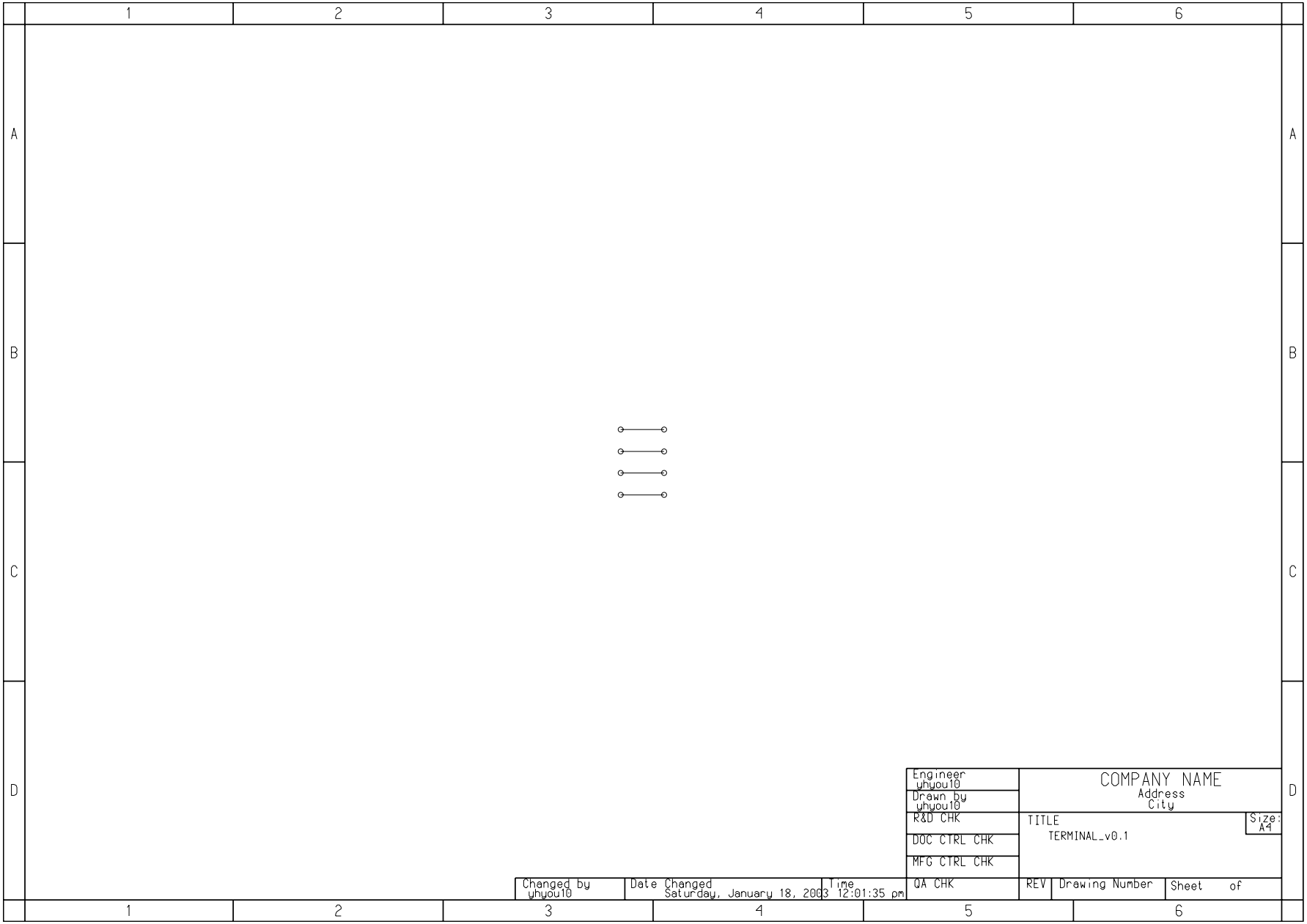

This Document can not be used without Samsung's authorization.

11. Power Signal

11.1 Main Board Power signal

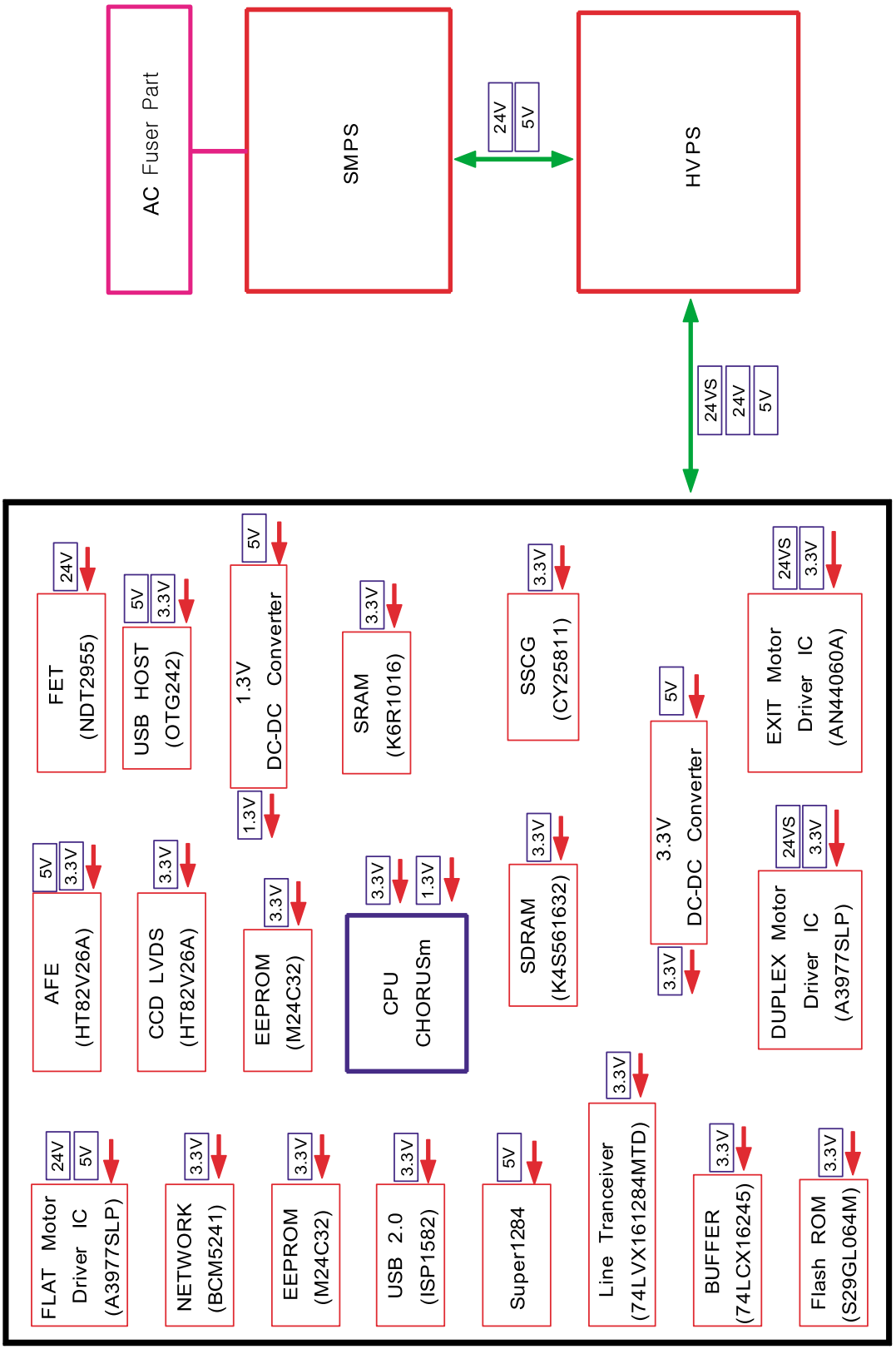

11.2 OPE / ADF Power signal

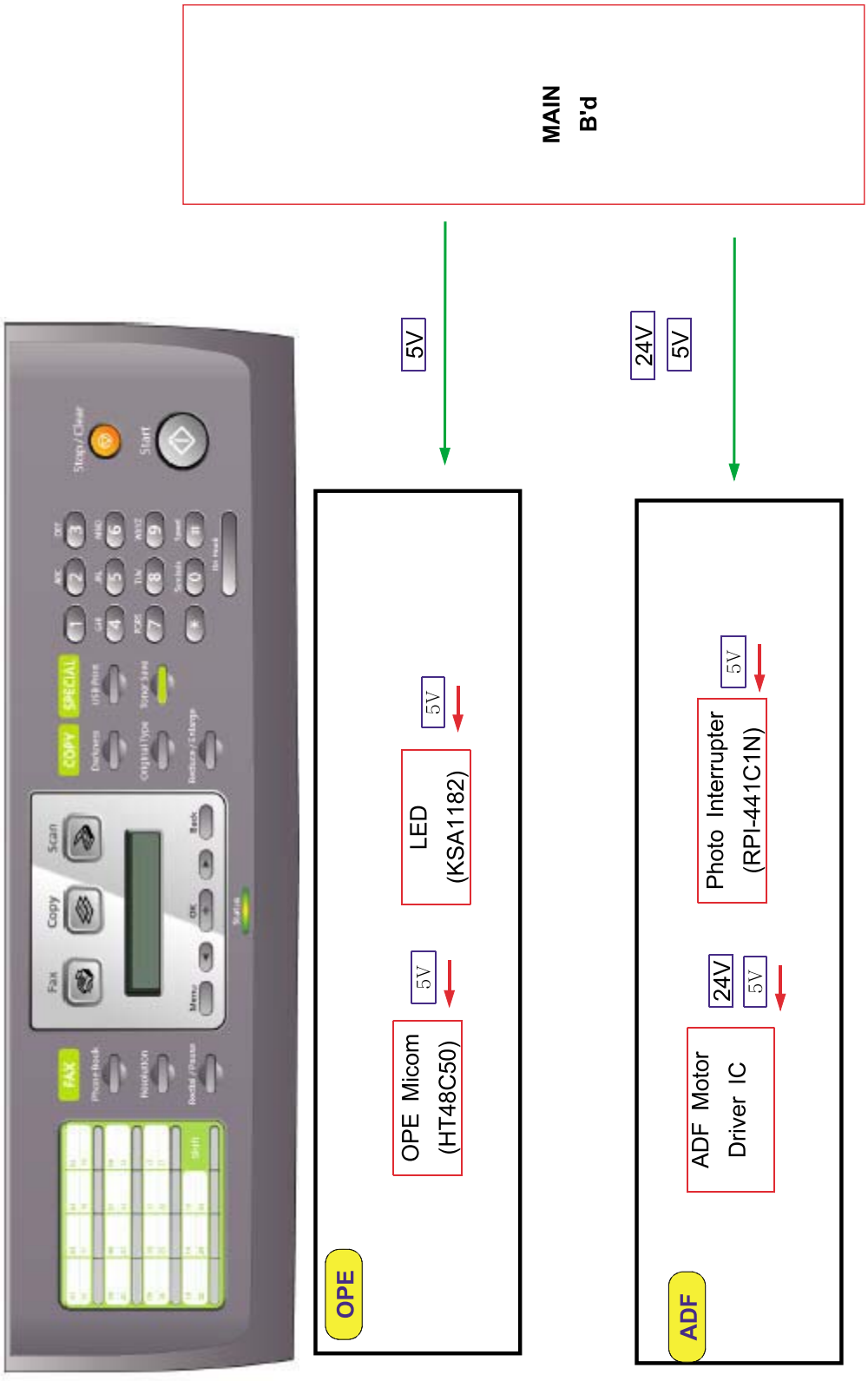

11.3 HVPS / Voltage map

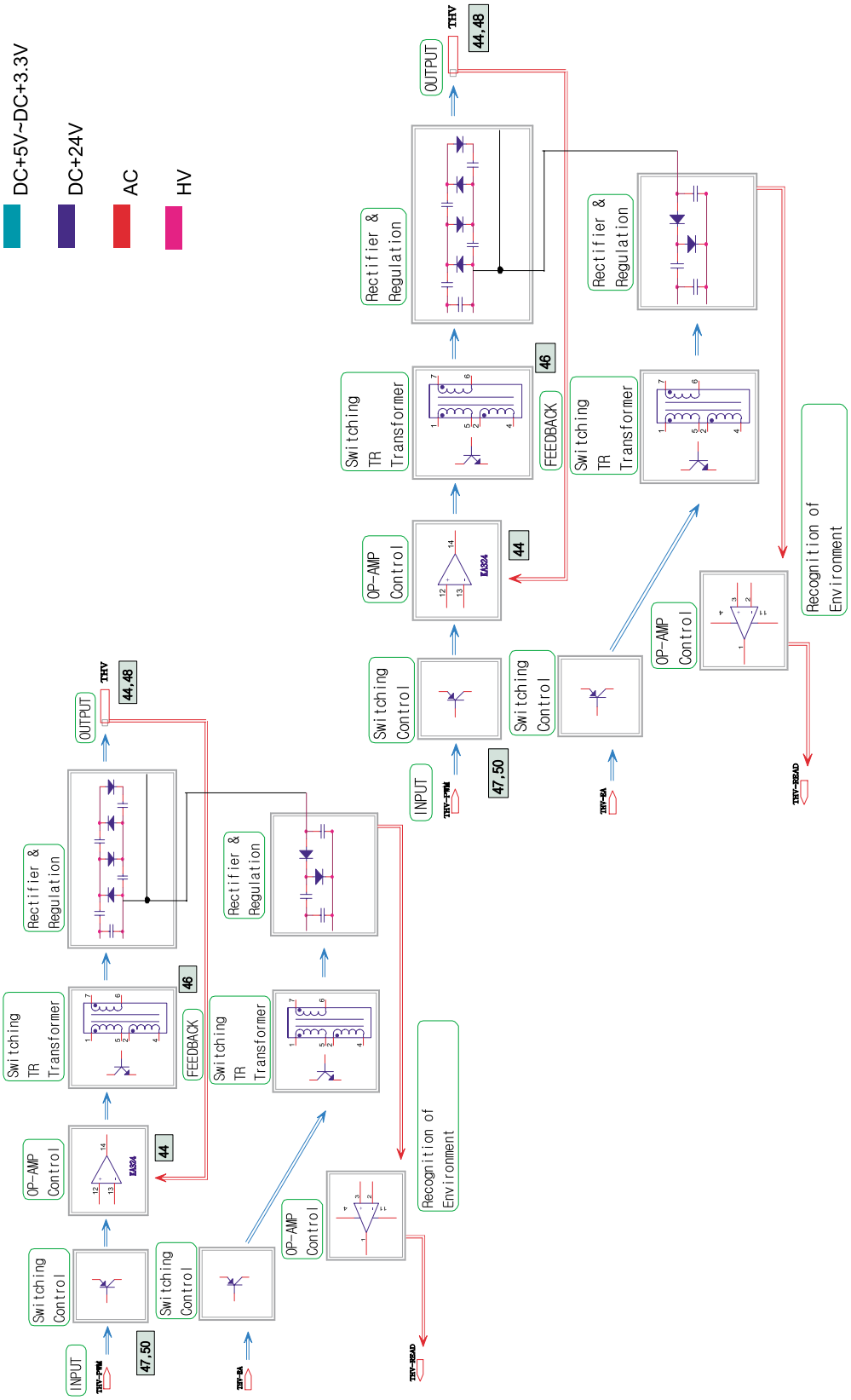

12. Reference Information

This chapter contains the tools list, list of abbreviations used in this manual, and a guide to the location space required when installing the printer. A definition of test pages and Wireless Network information definition is also included.

12.1 Tool for Troubleshooting

The following tools are recommended safe and easy troubleshooting as described in this service manual.

- **DVM (Digital Volt Meter)**
  Standard : Indicates more than 3 digits.

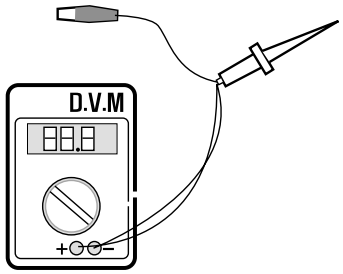

- **Driver**
  Standard : "-" type, "+" type (M3 long, M3 short, M2 long, M2 short).

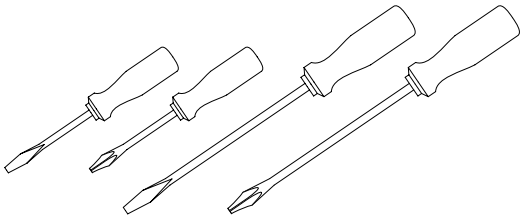

- **Tweezers**
  Standard : For general home use, small type.

- **Cotton Swab**
  Standard : For general home use, for medical service.

- **Cleaning Equipments**
  Standard : An IPA (Isopropyl Alcohol) dry wipe tissue or a gentle neutral detergent and lint-free cloth.

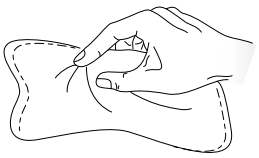

- **Vacuum Cleaner**

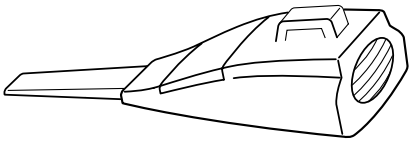

- **Spring Hook**
  Standard : For general use

- **Software (Driver) installation CD ROM**

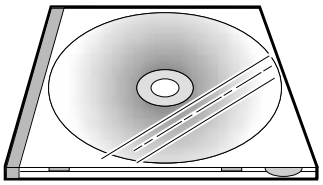

12.2 Acronyms and Abbreviations

The table in the below explains abbreviations used in this service manual.
The contents of this service manual are declared with abbreviations in many parts. Please refer to the table.

AC	Alternating Current
ADF	Automatic Document Feeder
ASIC	Application Specific Integrated Circuit
ASSY	assembly
BIOS	Basic Input Output System
CCD	Charge Coupled Device
CMOS	Complementary Metal Oxide Semiconductor
CN	connector
CON	connector
CPU	Central Processing Unit
CRUM	Customer Replaceable Unit Memory
dB	decibel
dbA	decibelampere
dBM	decibel milliwatt
DC	direct current
DCU	Diagnostic Control Unit
DPI	Dot Per Inch
DRAM	Dynamic Random Access Memory
DVM	Digital Voltmeter
ECP	Enhanced Capability Port
EEPROM	Electronically Erasable Programmable Read Only Memory
EMI	Electro Magnetic Interference
EP	electrophotographic
EPP	Enhanced Parallel Port
FCOT	First Copy Out Time
F/W	firmware
GDI	graphics device interface
GND	ground
HBP	Host Based Printing
HDD	Hard Disk Drive
HV	high voltage
HVPS	High Voltage Power Supply
I/F	interface
I/O	Input and Output
IC	integrated circuit
IDE	Intelligent Drive electronics or Imbedded Drive Electronics
IEEE	Institute of Electrical and Electronics Engineers. Inc
IPA	Isopropy Alcohol
IPM	Images Per Minute
LAN	local area network
lb	pound(s)
LBP	Laser Beam Printer
LCD	Liquid Crystal Display
LED	Light Emitting Diode
LSU	Laser Scanning Unit
MB	Megabyte
MFP	Multi-Functional Product
MHz	Megahertz
NVRAM	Nonvolatile random access memory
OPC	Organic Photo Conductor
PBA	Printed Board Assembly
PCL	Printer Command Language , Printer Control Language
PDL	Page Discription Language
PPM	Page Per Minute
PTL	Pre-Transfer Lamp
Q'ty	Quantity
RAM	Random Access Memory
ROM	Read Only Memory
SCF	Second Cassette Feeder
SMPS	Switching Mode Power Supply
SPGP	Samsung Printer Graphic Processor
SPL	Samsung Printer Language
Spool	Simultaneous Peripheral Operation Online
SW	Switch
Sync	Synchronous or synchronization
TBD	To Be Determined
USB	Universal Serial Bus

12.3 The Sample Pattern for the Test

The sample pattern shown in below is the standard pattern used in the factory.
The life of the toner cartridge and the printing speed are measured using the pattern shown below.
(The image is 70% of the actual A4 size).

12.3.1 A4 ISO 19752 Standard Pattern

This test page is reproduced at 70% of the normal A4 size

12.4 Wireless LAN

• This product uses a printing function with a wireless LAN, which is an option.
  - The wireless LAN function uses a frequency instead of connecting LAN cable to connect data to an access point for print.
  - For a wireless LAN connection, an AP is needed, It is possible to use wireless LAN onnection with wired LAN. Also, if AP is installed in an office or at home, the wireless LAN function can be simply used.

• Types of desk top PC (or Lap top) that uses the wireless LAN.

Division	Basic type	Recommend type
CPU	Over PENTIUM 233M	PENTIUM 300MHz
MEMORY	Over 64MB	Over 128MB
VIDEO CARD	Over 800X600	Over 1024X768
OS	Over WINDOWS 98	Over WINDOWS ME
INTERFACE CARD	A product has a certificated mark of Wi-Fi™	

• About the certificated mark of Wi-Fi™

- The Wi-Fi™ is a registered trademark of WECA (Wireless Ethernet Compatibility Alliance). Over 50 of a wireless LAN companies are member of it. The most of main wireless networking companies are attending and the main companies are Lucent technologies, Cisco, Intel/Symbol, 3Com, Enterasys (Cabletron), Compaq, IBM, Nokia, Dell, Philips, Samsung electronic, Sony, Intersil, and so on. This mark certifies mutual compatibility among product has Wi-Fi™ (IEEE 802.1) and it is certified as a standard of a wireless LAN market.

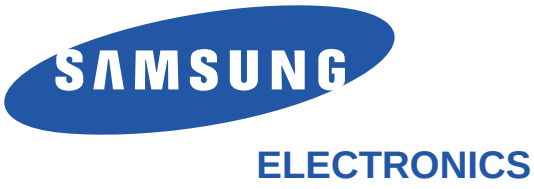

GSPN (Global Service Partner Network)

North America : service.samsungportal.com
Latin America : latin.samsungportal.com
CIS : cis.samsungportal.com
Europe : europe.samsungportal.com
China : china.samsungportal.com
Asia : asia.samsungportal.com
Mideast & Africa : mea.samsungportal.com

ⓒSamsung Electronics Co.,Ltd. February. 2006
Printed in Korea.
VERSION NO. : 1.01 **CODE** : JC-0157Z